User Manual

Model: MS-DCC180-2

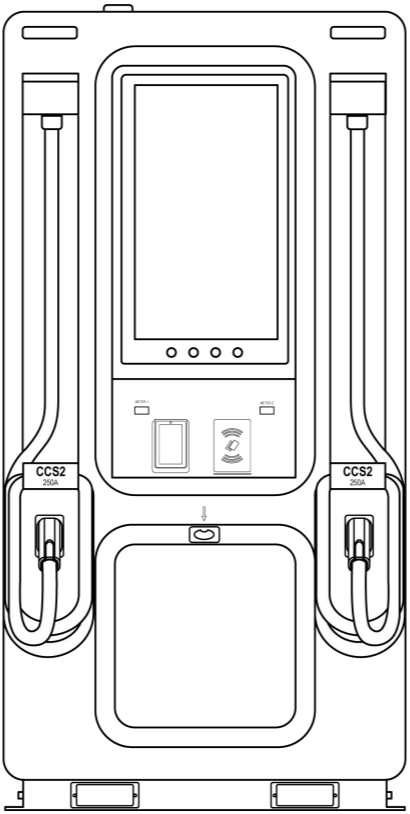

Contents

1 General information 3
1.1 All Rights Reserved 3
1.2 About This Manual 4
1.3 Intended Use 4
2.1 Product Introduction 6
2.2 Application Scenarios 6
2.3 Product Size 7
2.4 External Overview 8
2.5 Internal Overview 13
3 Installation 14
3.1 Materials Required 14
3.2 Moving Heavy Objects 17
3.3 Unpacking 20
3.4 Installation 22
4 Electrical Connection 34
4.1 Preparation Before Connection 34
4.2 Cable Connection 36
5 Operation Instructions 45
5.1 Powering On The Equipment 45
5.2 Powering Off The Equipment 50
5.3 Charging 51
6 Maintenance 59
6.1 General Maintenance 59
6.2 Maintenance Schedule 61

7 Troubleshooting 67

8 Repair Paint Damage 68

8.1 Prerequisites 68

8.2 Paint Repair Description 68

9 Emergency Handling 74

9.1 Flood 74

9.2 Fire 74

9.3 Fire Alarm 74

9.4 Gas Exhaust 75

9.5 Extinguishant Release or Fire 76

10 Storage 77

11 Transport 80

12 Technical Specifications 81

1 General information

Warning!

Read and follow carefully all safety warnings, instructions, illustrations and specifications provided with this product. Failure to follow instructions mentioned may results in electric shock, fire or serious injury.

Save all warnings and instructions for future reference.

1.1 All Rights Reserved

No part of this document can be reproduced in any form or by any means without the formal permission of the manufacturer .

Trademarks and Permissions

The trademarks used in this manual are owned by the manufacturer. All other trademarks or registered trademarks mentioned in this manual are owned by their respective owners.

Software Licenses

* It is prohibited to use data contained in firmware or software developed by the manufacturer, in part or in full, for commercial purposes by any means.
* It is prohibited to perform reverse engineering, cracking, or any other operations that compromise the original program design of the software developed by the manufacturer.

Disclaimer

“DANGER”, “WARNING”, “CAUTION”,“NOTICE” and “NOTE” in this manual do not represent all safety matters that should be followed, and you must also comply with relevant international, national or regional standards and industry practices. The manufacturer shall not

be liable for personal injury, property loss, product damage and subsequent losses under the following circumstances:

* Damages caused by force majeure, including earthquake, flood, volcanic eruption, mudslide,, lightning, fire, war, military conflict,typhoon, hurricane, and so on.
* Failure to comply with the provisions of this manual.
* The installation, operation and storage environment does not meet the relevant international, national or regional standards;
* Incorrect use of this product.
* Unauthorized or unqualified personnel repair the product, disassembly the rack and perform other operations.
* Use of unapproved spare parts.
* Unauthorized modifications or technical changes to the product or software.
* Incorrect shipment by yourself or the third party commissioned by you.
* Unsatisfactory materials and tools from you own that do not meet the relevant international, national or regional standards.
* Damage caused by yourself or the third party's negligence, intent, gross negligence, improper operation, or other accidents not caused by Deye.

1.2 About This Manual

This manual mainly describes the product information, guidelines for installation, operation and maintenance. In this manual, “equipment” or “ device” refers to relevant product, software, part, spare part or service,etc; “The manufacturer” refers to the producer, seller or service provider of the equipment.

1.3 Intended Use

The primary purpose of charging piles is to provide electrical energy replenishment for electric vehicles (EVs) and plug-in hybrid electric vehicles (PHEVs). Charging piles also can be integrated with energy storage systems to store electricity during off-peak periods and release it during peak hours to balance grid load.

2 Product Description

2.1 Product Introduction

A charging pile is a dedicated power device designed for electric vehicles to safely and efficiently replenish electrical energy. It converts grid power (either AC or DC) into a form suitable for vehicle batteries through wired connection charging methods.

2.2 Application Scenarios

Various applications can be achieved with the assistance of the PCU WEB.

2.3 Product Size

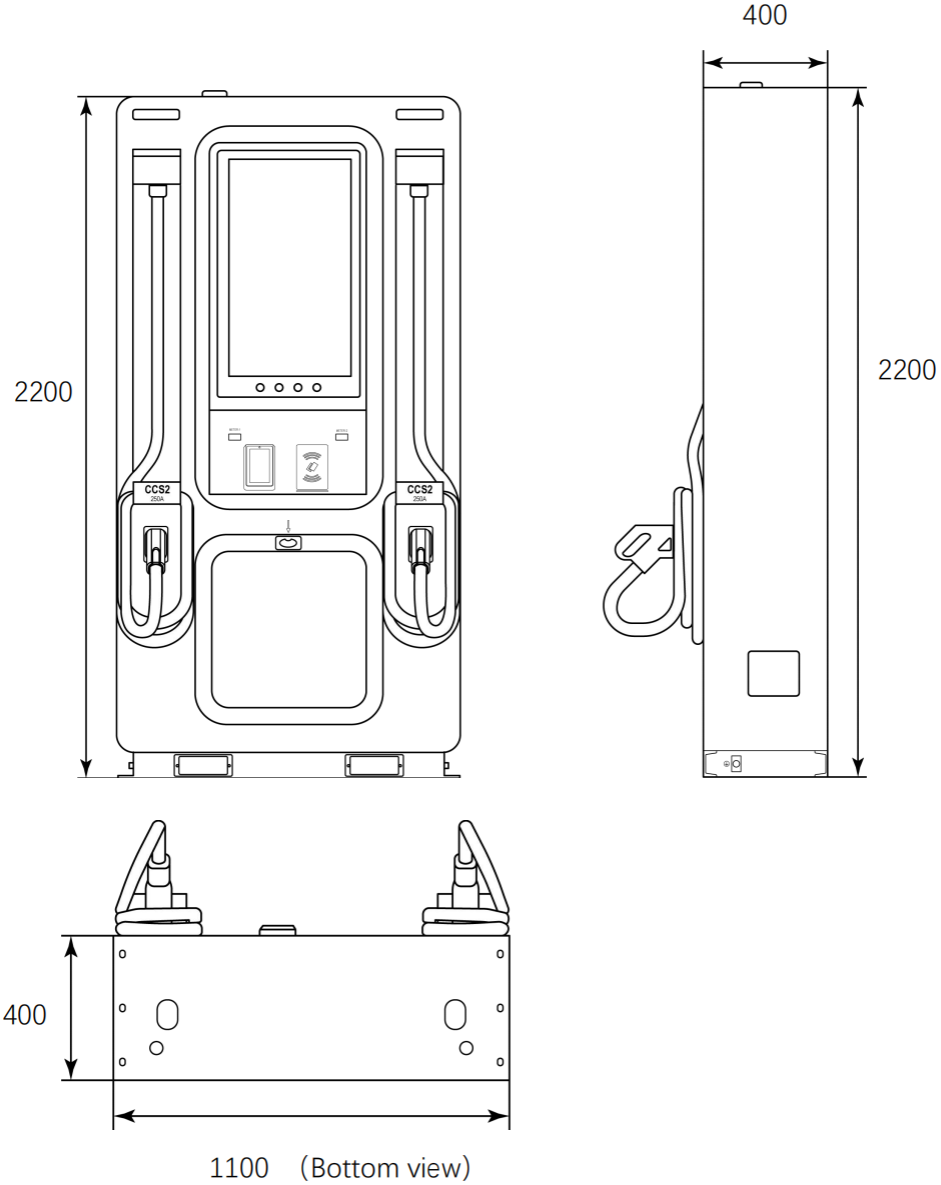

Unit:mm

2.4 External Overview

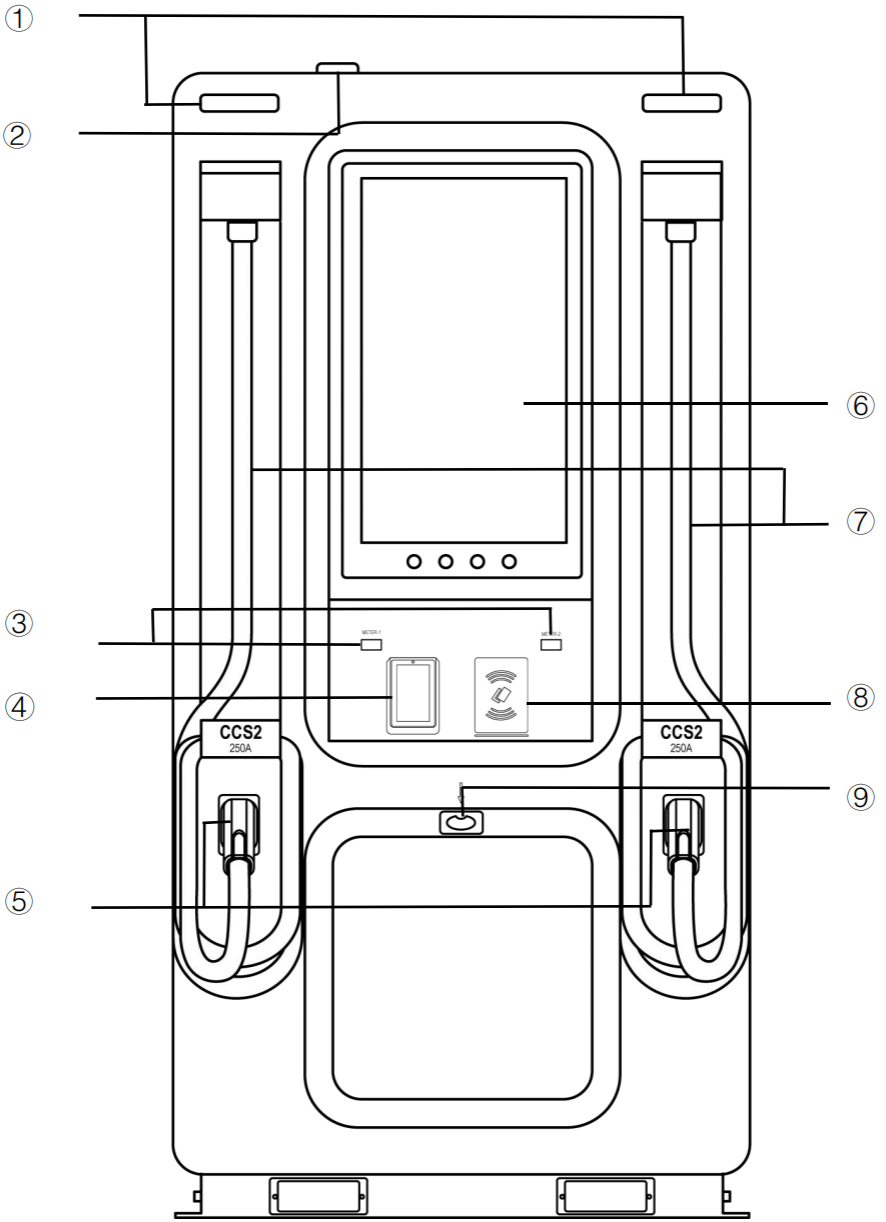

Front

No.	Item	No.	Item
①	Status indicator×2	⑥	LCD screen
②	GPS&4G antenna	⑦	CCS2 cable ×2
③	Meter×2	⑧	Card swipe module
④	Point of sale terminal (POS)	⑨	Emergency stop (EPO)
⑤	CCS2×2		

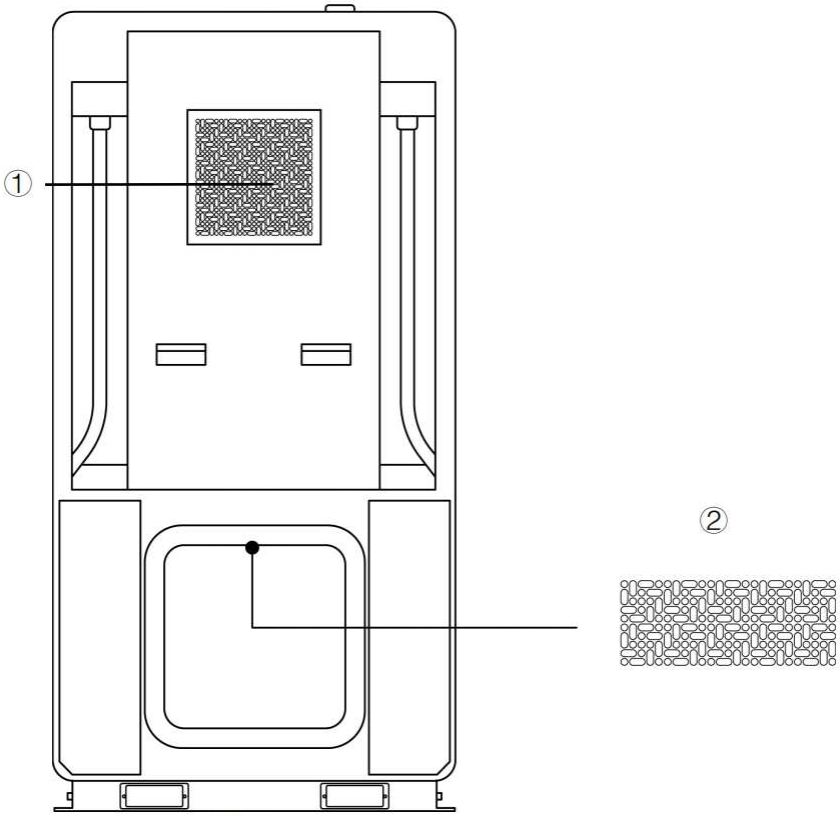

Rear

No.	Item	No.	Item
①	Air outlet	②	Air inlet

Status Indicator

The status indicator is designed to display the equipment's state by color coding and flashing patterns.

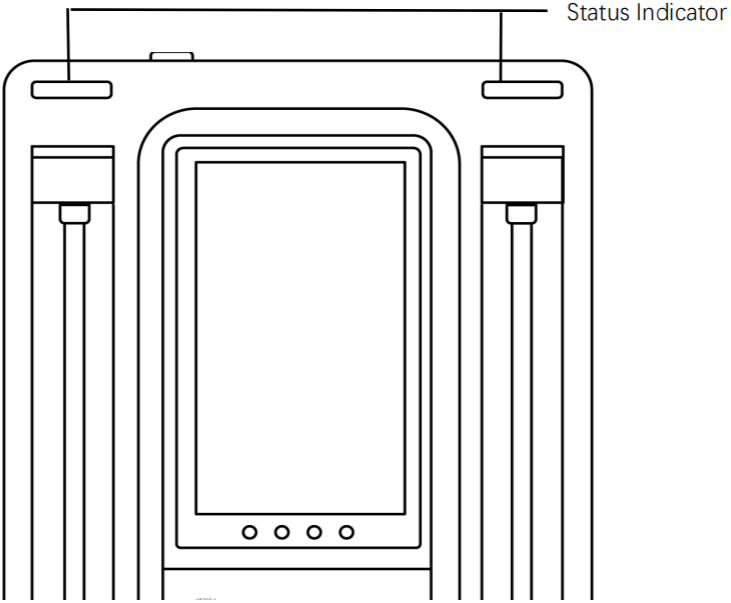

Device Status	Indicator Light Status
Standby	White light always on
Scheduled	Yellow light always on
Plugging in the gun	Blue light always on
Charging	Green light breathing (flashing)
Charging completed	Green light always on
Firmware updating	Red light always on
Power-on self-test	Red light always on
Log uploading	Red light always on
Malfunction	Red light always on

Emergency Stop (EPO)

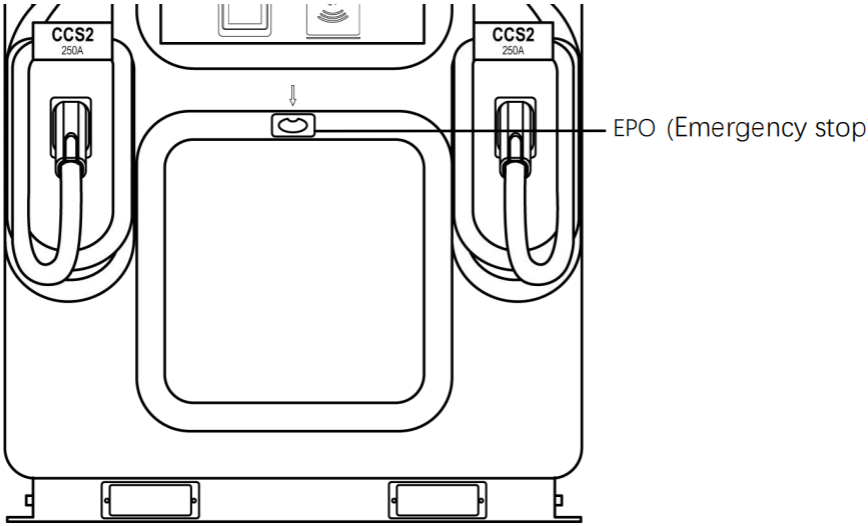

EPO (Emergency stop)

When in the emergency, press the EPO to shut off the system at once.

Notice !

Do not stop the device through the EPO if the system is running normally or the operator does not encounter with emergent conditions.

2.5 Internal Overview

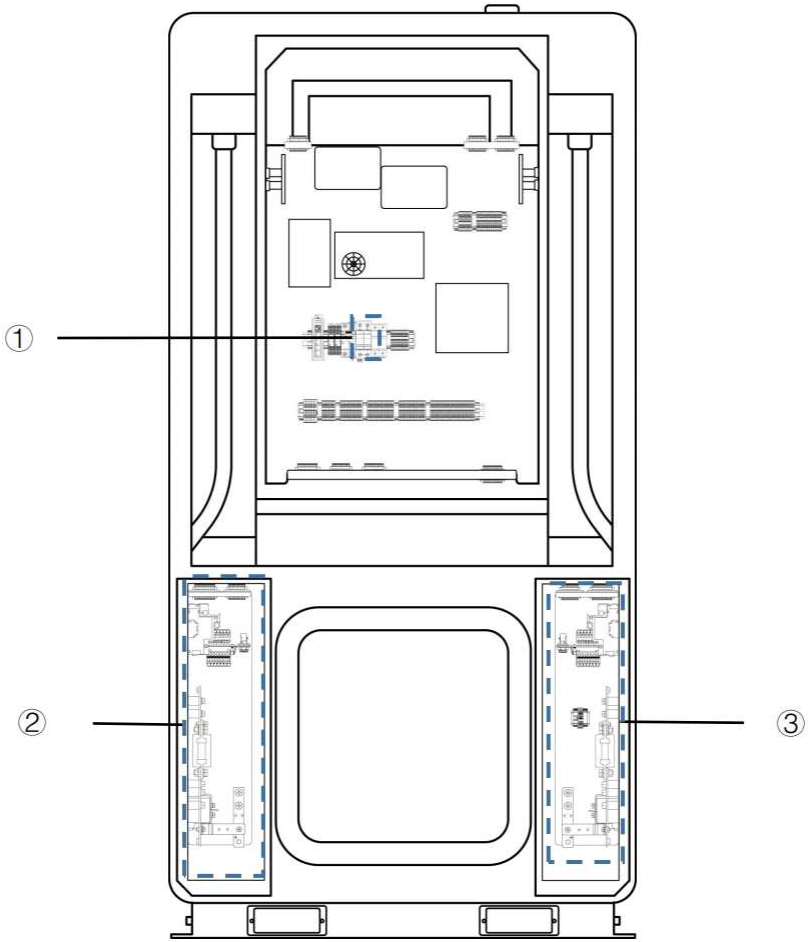

No.	Item	No.	Item
①	Auxiliary power circuit breaker	③	Component of CCS2 (Right side)
②	Components of CCS2 (Left side)		

3 Installation

3.1 Materials Required

Tools			
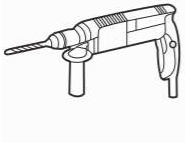			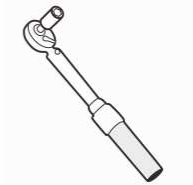
Hammer drill	Phillips insulated torque screwdriver	Flat-head insulated torque screwdriver	Insulated torque socket wrench
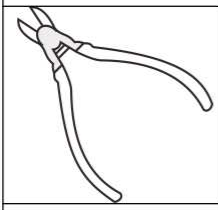	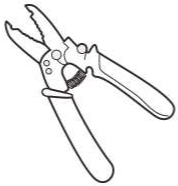		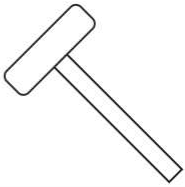
Diagonal pliers	Wire stripper	Cable cutter	Rubber mallet
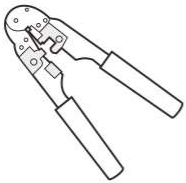	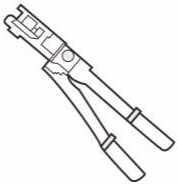		
RJ45 crimping tool	Hydraulic pliers	Needle-nose pliers	Marker

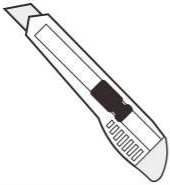		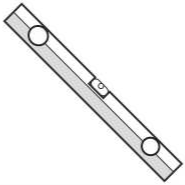	
Utility knife	Steel measuring tape	Level	Multimeter DC voltage measurement
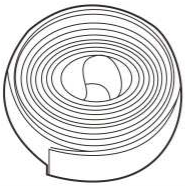			
Heat shrink tubing	Heat gun	Cable tie	Insulated ladder
Powered industrial forklift	Crane		
Personal Protective Equipment			
			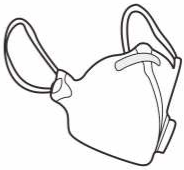
Insulated gloves	Protective gloves	Goggles	Dust mask

Insulated shoes	Safety helmet	Protective suit	

3.2 Moving Heavy Objects

After arrival of your goods, perhaps you need move it to designated working area. Refer to the following picture for movement of heavy objects.

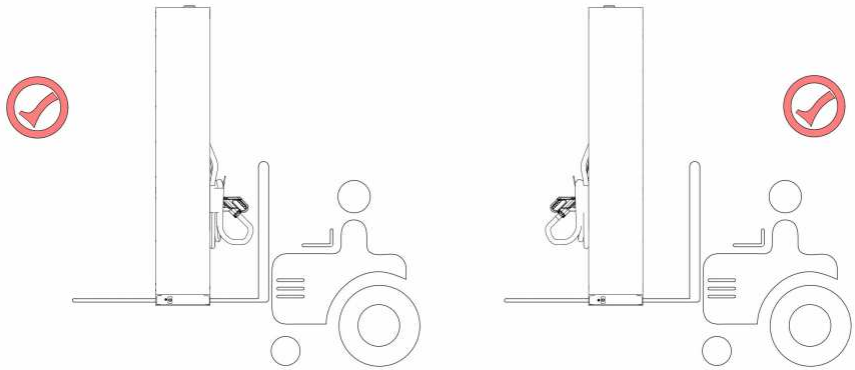

Equipment requirements		
Bearing capacity		>2t
Fork	Fork length	⩾1m
	Width	80mm~160mm
	Thickness	25mm~70mm
Forklift lifting height		When the foundation height ⩽0.3m, the lifting height ⩾2m; when the foundation height >0.3m, the lifting height shall be increased accordingly

When moving your product:

- Keep at least 2m away from the forklift during operation.
- No passengers are permitted to stand on or be lifted by forklifts.
- Do not overload forklifts or raise loads too high, as this can affect overall stability.
- Maintain speeds below 3mph and avoid sharp turns.
- Before reversing, the forklift operator must check behind them and ensure it is safe to proceed.
- When reversing in confined spaces, a spotter is needed,who directs the forklift operator.
- Use caution when lifting this load on uneven surfaces.
- Never operate the forklift on slopes ⩾ 5 degrees.
- During movement, avoid tilting the cabinet or placing it upside down. If the cabinet must be tilted or inverted , please straighten it as soon as possible, and the cabinet needs to be left standing for 2 hours before it can be powered on.
- Suggest to insert the forklift tooth into the position indicated by the “Forklift fork insertion: in the package material. See the following figure.
- When lifted heavy unbalanced load, refers to the marking for center of gravity location.

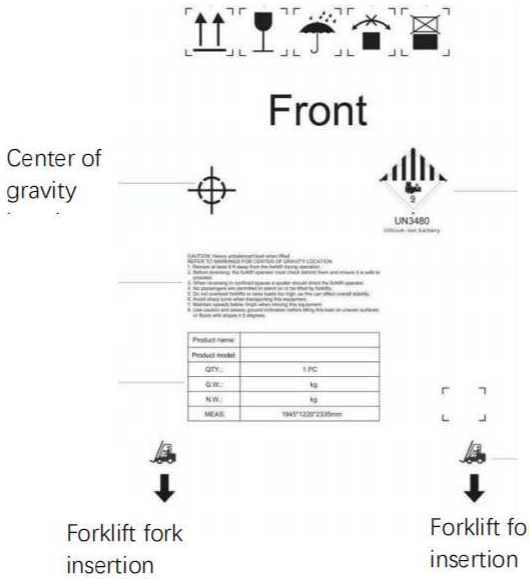
Front
Center of gravity
9
UN3480
Lithium-ion battery
CAUTION: Heavy unbalanced load when lifted
REFER TO MAINTENANCE FOR CENTER OF GRAVITY LOCATION
1. Remain at least 5 ft away from the forklift during operation.
2. Before operating, the forklift operator must check behind them and ensure it is safe to proceed.
3. When reversing in confined spaces a spotter should direct the forklift operator.
4. Do not overload forklifts or raise loads too high as this can affect overall stability.
5. Do not overload forklifts or raise loads too high as this can affect overall stability.
6. Avoid sharp turns when transporting this equipment.
7. Maintain speeds below 5mph when moving this equipment.
8. Use caution and assess ground estimation before lifting the load on uneven surfaces or floors with slopes 0-3 degrees.
Product name:
Product model:
QTY.: 1 PC
G.W.: kg
N.W.: kg
MEAS: 1945*1220*2335mm
Forklift fork insertion
Forklift fork insertion

3.3 Unpacking

Warning!

- After setting up the equipment well, carefully unpack the package so as to avoid scratching equipment.
- If possible, do not remove the transport packaging before arrival at the installation site.
- After unpacking, check whether the fasteners and removable parts are missing. If they are missing, please contact you vendor at once.
- Keep the equipment stable during unpacking.
- If the installation environment is not friendly to the equipment, take measures to prevent failure inside the device caused by condensation or dust corrosion (for example, cover with woven cloth or dust cover).
- When it comes to package, EPE foam is broadly used for most of products, which characterizes with anti-shock and easy-disassemble. It is possible to unpack the equipment with a tool like a cutter or knife.

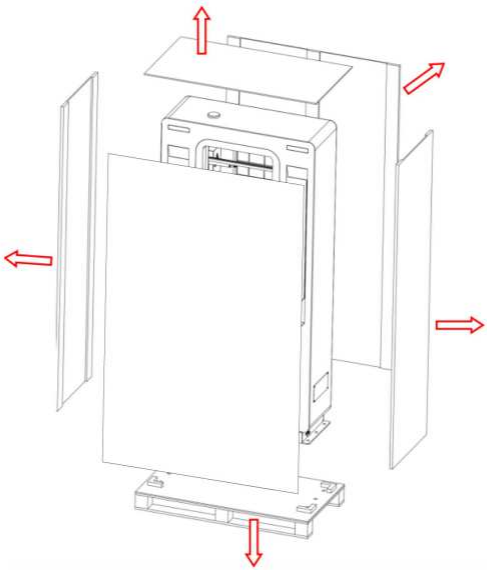

After unpacking the equipment, check that the deliverable contents are intact and complete, and free from any damage. If any items listed in the *Packing List* is missing or damaged, contact your dealer or call service hotline: **+86-0574-86320560.**

Packing List		
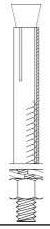		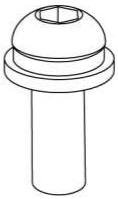
M12*150 Expansion bolt ×6 pcs	Fork insertion board ×4 pcs	M4*10 Cross recessed pan head combination screw×12pcs
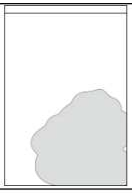		
Fire-resistant mud 2.5kg		

3.4 Installation

Warning!

• Your product is delivered without full charge. It is recommended to make your equipment charged within three months.
• Assembly must be carried out in accordance with the design, technological requirements, regulations and relevant standards.
• The parts must be cleaned before assembly, free of burrs, flash edges, oxide, rust, sand, dust and stains.
• The parts shall not be bumped, scratched or rusted during assembly.
• Wear appropriate personal protective equipment at all times during any assembly operation on site. The following personal protective equipment is considered a minimum requirement:
-In a dry environment, wear S3 safety shoes .
-On rainy or wet ground, wear S5 safety boots .
-Wear flame-retardant work clothes.
-Wear flame-retardant work pants.
-Safety gloves.

3.4.1 Installation Requirements

3.4.1.1 Installation Personnel

• Only qualified professionals or trained personnel are allowed to install,

the equipment.

-Professionals:personnel who are familiar with the working principles and structure of the equipment, trained or experienced in equipment operations and are clear of the sources and degree of various potential hazards in equipment installation.

-Trained personnel:personnel who are trained in technology and safety have required experience,are aware of possible hazards on themselves in

certain operations and are able to take protective measures to minimize

the hazards on themselves and other people.

• Personnel who plan to install the equipment must receive all necessary safety precautions and local relevant standards.

•Only qualified professionals are allowed to remove safety facilities and inspect the equipment.

•Knowledge of electronic, electrical wiring and mechanical expertise, and be familiar with electrical and mechanical schematics.

• Understanding and complying with this document and other applicable documents.

3.4.1.2 Installation site requirements

Danger!

Do not expose the equipment to flammable or explosive gas or smoke. Do not perform any operation on the equipment in such environments.

Danger!

Do not store any flammable or explosive materials in equipment area.

Danger!

Do not place the equipment near heat sources or fire sources, such as smoke, candies, heaters, or other heating devices. Overheat may damage the equipment or cause a fire.

Warning!

Install the equipment in an area far away liquids. Do not install it under areas prone to condensation, such as under water pipe and air exhaust vent, or area prone to water leakage, such as air ventilation vents, or feeder windows of the equipment room. Ensure that no liquid enters the equipment to prevent faults or short circuits.

Warning!

To prevent damage or fire due to high temperature, ensure that the ventilation vents or heat dissipation systems are not obstructed or covered by other objects while the equipment is running.

Warning!

Do not install the equipment near areas that may produce interfering gases, such as garbage dumps or chimney outlets.

• The installation and usage environment must meet relevant international, the local laws and regulations.The user is obliged to protect the device against fire or other hazards.

• Do not install in low-lying areas. The installation level must be at least 300mm higher than the highest water level in the area.

• To protect the equipment from wildfires caused by high temperatures in summer, it should be free of vegetation and flammable plants within 3 meters of the surrounding area.

• Considering safety, the distance between the equipment and residential buildings should be more than 12m, and the distance between the equipment and schools, hospitals and other densely populated buildings should be more than 30.5m. If this safety distance cannot be met, a firewall should be built between the equipment and the building.

• The safe distance between the equipment and the production building shall comply with local fire codes or standards.

• Outdoor storage systems should be at least 10 feet away from boundaries, public roads, buildings, flammable materials, hazardous materials, high piles, and other hazards not associated with the grid infrastructure.

• The equipment should be installed in an environment free from the risk of explosion。

• During the installation, commissioning, and operation of the energy storage system, comply with the principle: the number of fire extinguishers near each unit is not less than 2.

• The distance between the exhaust device of the energy storage system and the heating, ventilation, and air conditioning intakes, windows, doors, discharge platforms, and fire sources of other buildings or facilities shall be more than 4.6m.

•Reserve enough space for expansion according to the needs of the whole life cycle.

• Ensure that the equipment is installed in a clean, dry and well ventilated area with proper temperature, humidity ,altitude range and so on. Check for more data in the "***Technical Specifications***" section.

• Do not install energy storage systems in salt-damaged or polluted areas because they may be corroded. Energy storage systems can be

used in the following or better environments:

-In a place where is 2000m far away from the coast. It is not recommended to use the energy storage system when it within 500m to 2000m away from the coast . The energy storage system cannot be used when the distance from the coast is less than 500m .

-In a place where the distance from heavy pollution sources, such as smelters, coal mines, thermal power plants, is more than 1500m at least.

-In a place where the distance from moderate pollution sources such as chemical, rubber, and electroplating is more than 1000m at least.

-In a place where the distance from light pollution sources such as food, leather, heating boilers, slaughter houses, centralized garbage dumps, and sewage treatment stations is more than 500m at least.

• Keep the device out of the reach of children and away from daily working or living area, including but not limited to the following areas:studio, bedroom, lounge, living room, music room, kitchen,game room, room theater, sunroom,toilet,bathroom,laundry,and attic.

• Do not install the equipment in places without proper fire fighting facilities, or difficult for firefighters to access.

• Do not install the equipment in an easily accessible position because the temperature of the enclosure and heat sink is high when the device is running.

• Do not install the device on a moving object, such as ship, train, or car.

• Do not install the equipment in an environment with magnetic dust, volatile or corrosive gases, infrared and other radiations, organic solvents, conductive metal,or salty air.

• Do not install the equipment in an area conducive to growth of microorganism such as fungus or mildew.

• Do not install the equipment in an area with strong vibration, noise, or electromagnetic interference.

• Do not install the equipment in an position that may be submerged in water.

3.4.1.3 Foundation requirements

An inadequately constructed foundation can introduce substantial challenges to the installation of your device, affecting the smooth operation of doors and the overall functionality of the system. Consequently, the foundation for an device must be meticulously designed and constructed in accordance with established standards. This ensures it fulfills the necessary requirements for mechanical support, cable routing, and future maintenance and overhaul operations. During the construction of the foundation, at least the following criteria must be satisfied:

1. **Surface Material:** Install cabinets on concrete or other non-combustible surfaces.
2. **Surface Condition:** Ensure the surface is level, secure, flat, with sufficient load-bearing capacity, and free of depressions or tilts.
3. **Concrete Specifications:** Default to C30 grade concrete with a thickness of 200mm if not specified.
4. **Extension Beyond Cabinet:** Extend each side 300mm beyond the cabinet edges.
5. **Reinforcing Steel Bars:** Use HRB400 (Grade III) steel bars, 12mm diameter, spaced 150mm apart.
6. **Anti-Corrosion Measures:** Apply anti-corrosion treatments to steel bars after rust removal as per standards.
7. **Bedding Layer:** Use a 100mm thick C15 grade bedding layer under the slab.
8. **Bearing Stratum:** Foundation bearing stratum must be undisturbed soil with a characteristic bearing capacity ⩾100Kpa.
9. **Dewatering Measures:** Implement dewatering during construction to prevent waterlogging in the foundation pit.
10. **Excavation Safety**: Ensure proper safety measures for excavation support.
11. **Water Prevention:** After excavation, the foundation pit must not be soaked in water. If disturbed by water, further excavation and replacement filling are required.

12. **Height Requirement:** The foundation must be higher than the local historical highest water level and at least 300mm above the ground level.
13. **Drainage System:** Build drainage facilities according to local geology and municipal drainage requirements to ensure no water accumulation occurs at the equipment foundation. It should meet the drainage needs for the largest rainfall in local history. Discharged water from the drainage system must be treated in accordance with local laws and regulations.
14. **Surface Leveling:** The levelness error between the equipment foundation and the cabinet contact surface must be ≤3mm.
15. **Pit Compaction:** The bottom of the equipment foundation pit must be compacted and leveled before proceeding with construction.
16. **Weight Bearing:** The equipment foundation is configured according to the total weight of the equipment. If the bearing capacity of the foundation does not meet requirements, re-verification is necessary.
17. **Cable Management:** When building the foundation, consider the cable outlet of the energy storage system and reserve trenches or inlet holes accordingly.
18. **Sealing:** Both the reserved holes of the equipment foundation and the inlet holes at the bottom of the equipment should be sealed after installation.

Cable Trench Requirements

For energy storage cabinets adopting the bottom cable entry method, a trench must be preinstalled on-site since no side cable inlets are provided to prevent foreign objects from entering. The following requirements apply to the trenches:

1. **Dust-proof and Rodent-proof Design:** To avoid foreign objects entering the energy storage cabinets, the trench must have an effective dust-proof and rodent-proof design.
2. **Waterproof and Moisture-proof Measures:** In order to prevent cable aging and short circuits that could impact the normal operation

of the energy storage cabinets, the trench needs waterproof and moisture-proof measures.

3. **Sufficient Cable Bending Radius:** Considering the larger power rating of the energy storage cabinets and the requirement for thicker cables, the trench design must take into account the cross-sectional area of the cables and provide a sufficient bending radius.

Warning!

The foundation drawing cannot be used as the final construction drawing but only for reference. Users must verify the design parameters of the energy storage system foundation based on the installation environment, ground bearing capacity, geological conditions, and seismic requirements of the project site.

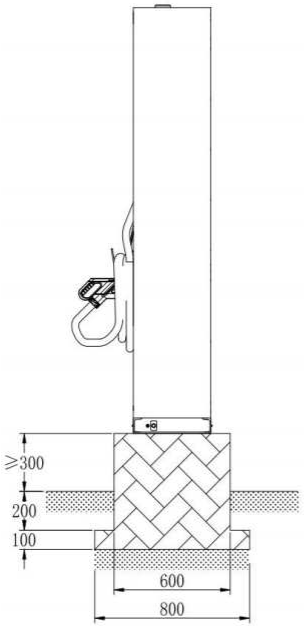

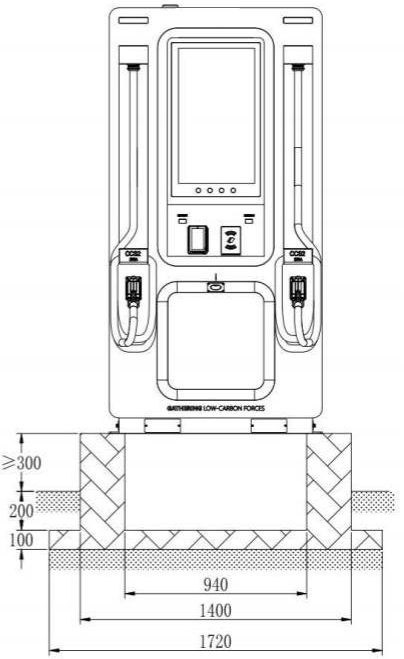

3.4.1.4 Installation clearance requirements

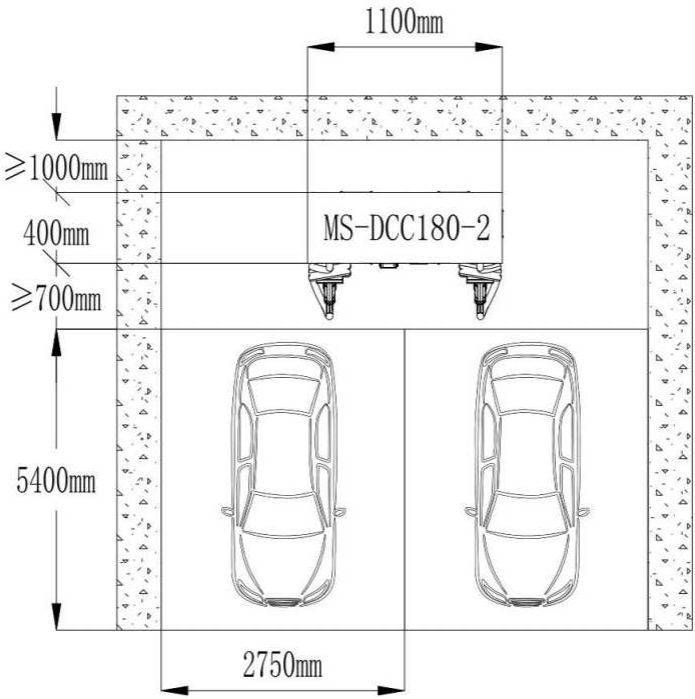

3.4.2 Fixing the Charging Pile

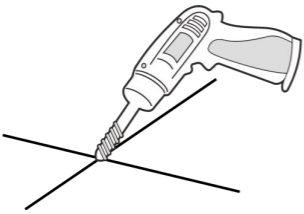

1

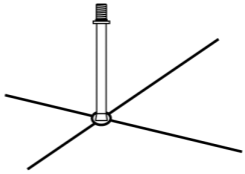

2

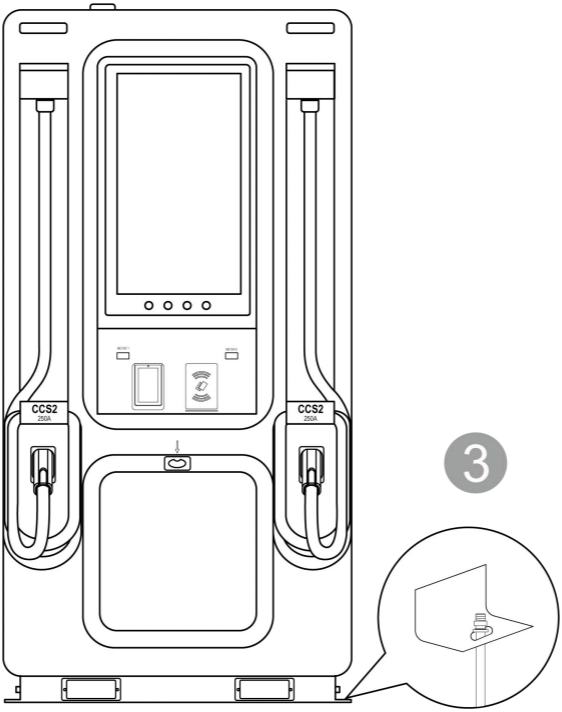

3

1. Drill holes, with 102-105 mm depth, on the ground using an electric hammer.(①)
2. Pre-install the 8 expansion bolts (M12*150) with 95 N•m. (②)
3. Put the equipment in place and then secure it to the ground by attaching their nuts onto the bolts.(③)

Note!

Due to the uncertainty of drilling accuracy and bit material, it is recommended to choose a drill bit from Φ20.5 to Φ21.

3.4.3 Attach the Boards

Making sure that the charging pile has been seated well, you need to attach one board onto every hole for forklift fork insertion, which is used to prevent dust or other foreign objects entering the machine. It is required to secure 4 boards using 8 screws (M4x10).

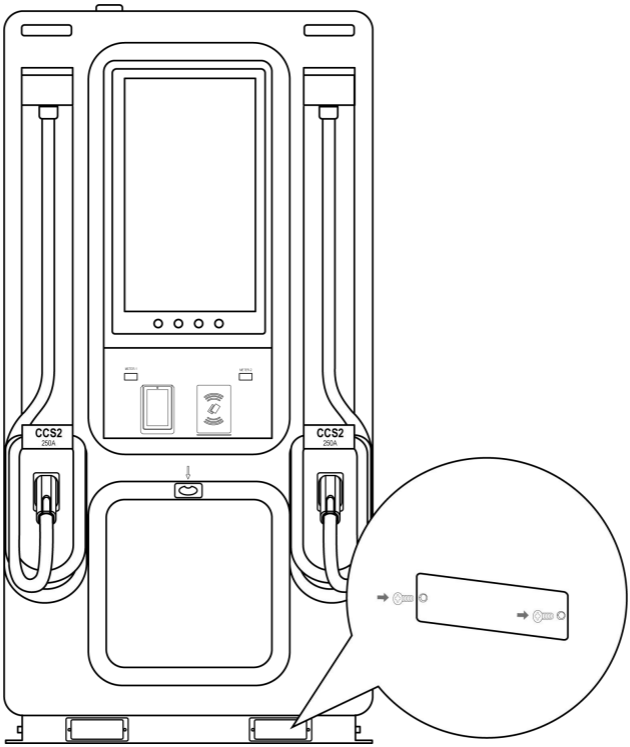

4 Electrical Connection

4.1 Preparation Before Connection

Notice!High voltage! Shock!

- Do not contact live parts directly without protection!
- Before installation, ensure that there is no voltage on the AC side and DC side.
- Do not place the equipment on a flammable surface.

Warning !

- Sand and moisture infiltration can damage the electrical equipment in the container or affect its operating performance!

-Do not perform electrical connections during sandstorms or when the relative humidity of the surrounding environment is greater than 95%.

-Make electrical connections when there is no wind or sand and when the weather is clear and dry.

- Before connecting cables, check that the polarity of all input cables is correct. Do not pull wires and cables forcibly during electrical installation. • Otherwise, the insulation performance may be affected. Make sure all cables and wires have enough room to bend. Take necessary auxiliary measures to reduce the stress on cables and wires.
- After each connection is complete, carefully check whether the connection is correct and secure.
- When connecting to inverters or being in parallel mode, please use cables provided in the unpacking list. If other cables must be used in special cases, ensure they meet relevant standard.

4.1.1 Cable Requirements

When wiring, cables are supposed to meet the following requirements:

- Sufficient current-carrying capacity. Factors that can influence this capacity are shown as follows:

-environment condition;

-the type of insulated materials of conductors;

-cable routing;

-material and cross-section of cables;

- Suitable diameter and length of cables
- Correct specification and material of cables used for DC input
- Correct specification and material of cables used for AC input
- Only use fire-resistant cables.

How to crimp an OT or DT terminal?

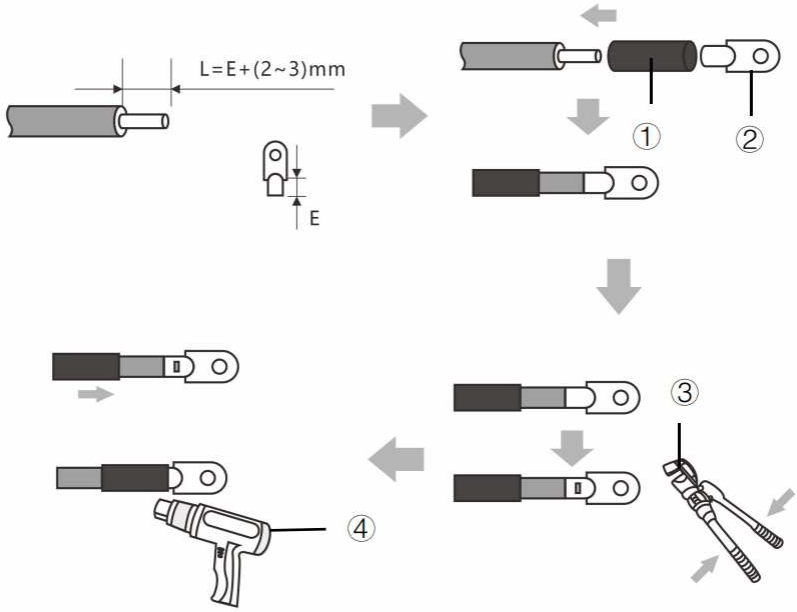

NO.	Description	NO.	Description
①	Hot air duct	③	Hydraulic pliers
②	OT/DT	④	Heat Gun

4.2 Cable Connection

Danger!

All electrical connections must be made when the equipment is completely powered off.

Danger!

Do not smoke or have an open flame around the device. Wear personal protective equipment and and use dedicated insulated tools to avoid electric shocks or short circuits.

Warning!

- Equipment damage caused by incorrect connections is not covered by the product warranty.
- Only qualified electrical technicians are allowed to connect cables.
- Operation personnel must wear proper PPE when connecting cables.

Warning!

When connecting cables, do not place installation tools, metal parts, or sundries on the device. After the connection, clean up objects around the area.

Caution!

- Stay away from the equipment when preparing cables to prevent cable scraps from entering the equipment. Cable scraps may cause sparks and result in personal injury and equipment damage.

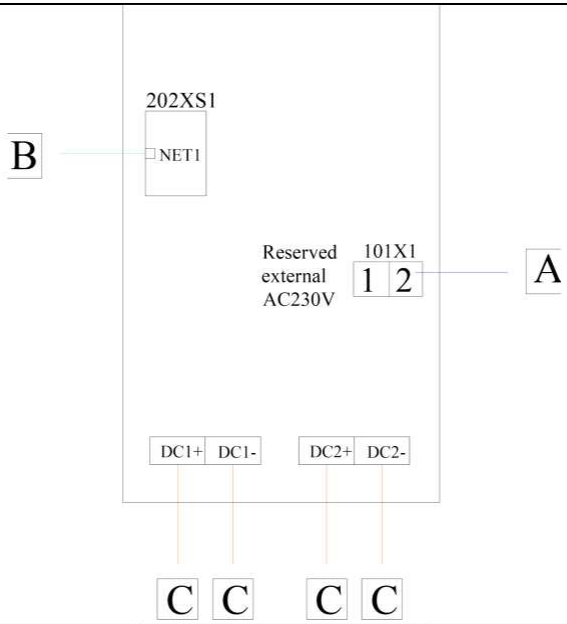

Cable	Recommended size	Torque
A	2*2.5mm²	/
B	CAT6 FTP	/
C	95mm²	14N·m

4.2.1 How to position terminals related?

Note!

- After wiring, pull out cables slightly to prove that they are connected securely.
- After completing the wire connection, use fire-resistant mud to seal the cable pass-through holes.

1. Auxiliary Power

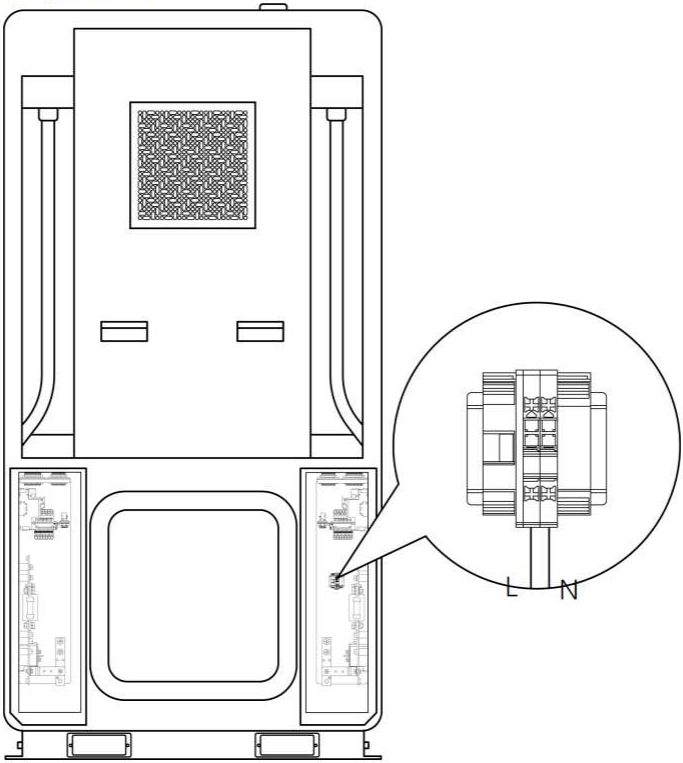

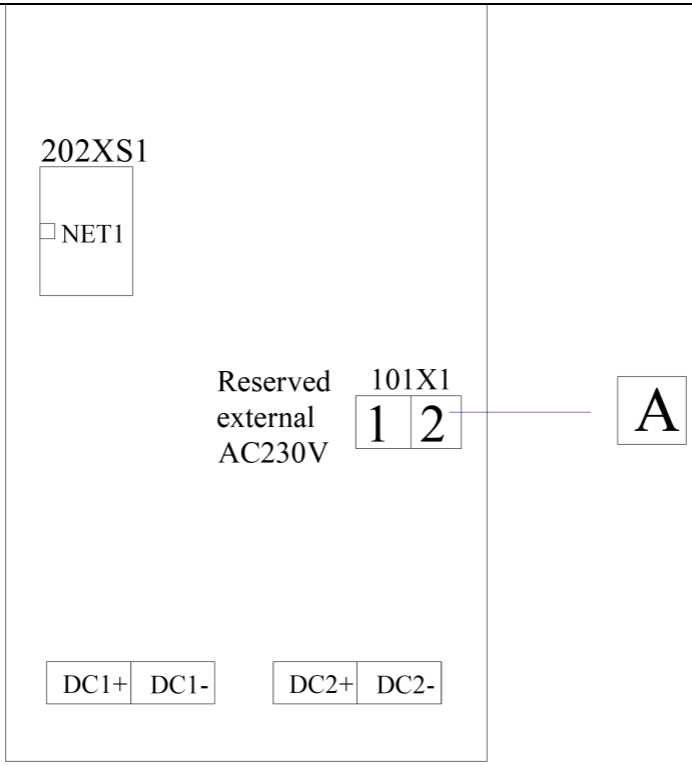

Step	Port	Description	Recommendation	Terminal
Step 1: Attach to auxiliary power	101X1:1 (L)	Connect to AUX POWER AC220V	2.5mm²	E2510
	101X1:2 (N)	Connect to AUX POWER AC220V	2.5mm²	E2510

2. Communication cable

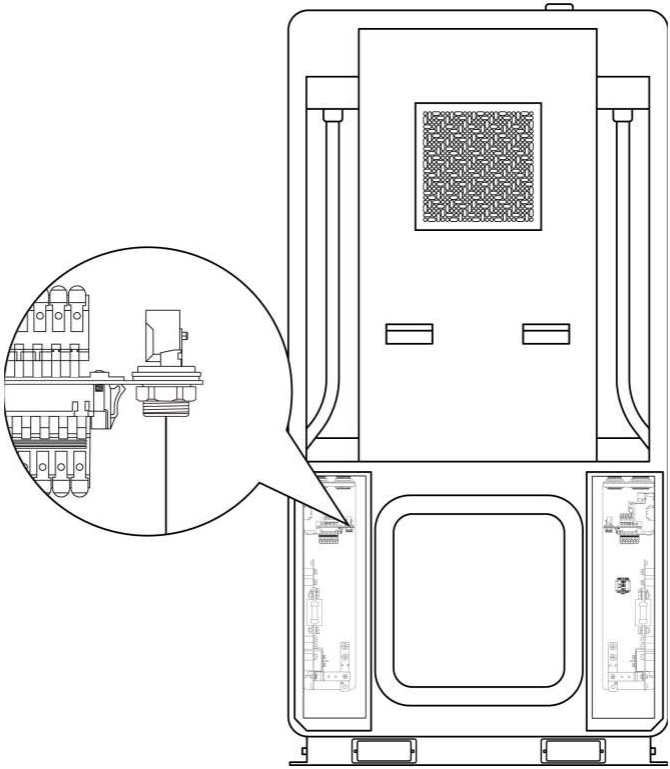

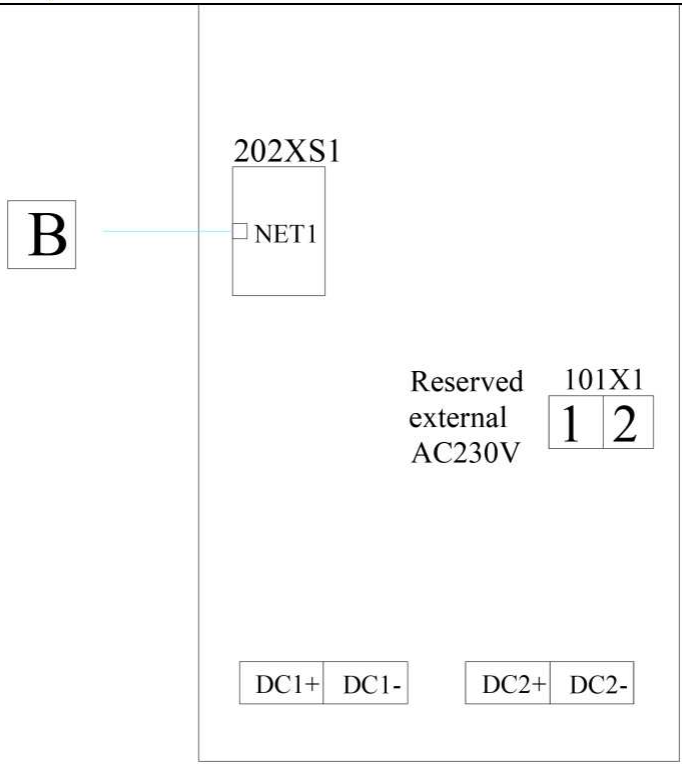

Step	Port	Recommendation	Terminal
Step 2: Perform communication cable connection	202XS1	CAT6 FTP	RJ45

3. Power cable

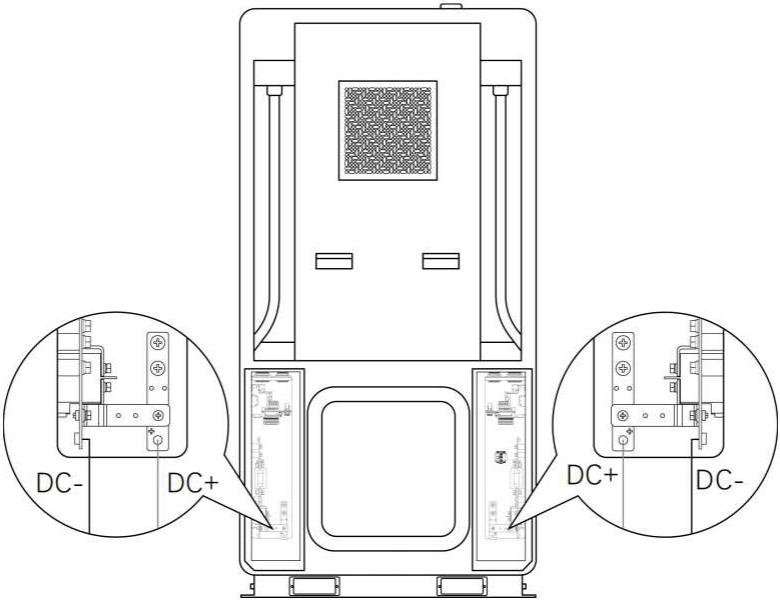

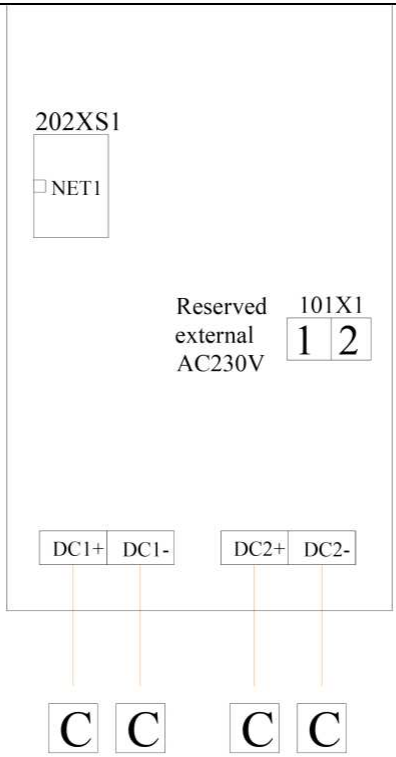

Step	Port	Recommendation	Torque
Step 3: Perform power cable connection	DC+	DT 95-8, 95mm²	14 N•m
	DC-	DT 95-8, 95mm²	14 N•m

4.2.2 Grounding

Warning !

Ensure that the PE cable is securely connected. Otherwise, electric shocks may occur.

Note !

- The PE point at the AC output port is used only as a PE equipotential bonding point and cannot substitute for the PE point on the enclosure.
- It is recommended that silicone grease or paint be applied around the ground terminal after the PE cable is connected.
- After completing the grounding connection, the grounding resistance must be measured. The specific grounding resistance value should comply with the relevant national/local standards and regulations.

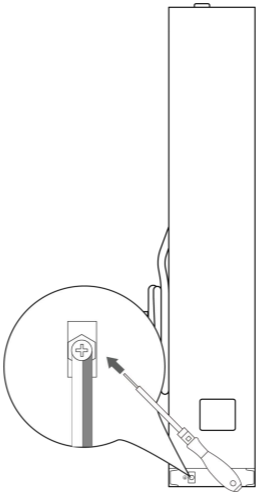

Type	Cable color	Size (mm²)	Terminal	Torque (N•m)
Protective earth (PE)	Yellow-green	70	DT 70-10	20

5 Operation Instructions

5.1 Powering On The Equipment

5.1.1 Check Before Power-On

General Check

No.	Check Item	Acceptance Criteria
1	Appearance	• The equipment is intact and free from rust or paint flake-off. If the paint flakes off, repair the damaged paint. • The labels on the device are clear. Damaged labels must be replaced.
2	Cable appearance	• Cable sheathings are properly wrapped and not damaged. • Cable hoses are intact.
3	Cable connection	• Cables are connected in the designed positions. • Terminals are prepared as required and securely connected. • Labels on both ends of each cable are clear and specific, and attached in the same direction.
4	Cable routing	• Cables are neat and tidy. • Cable tie joints are evenly cut without burrs. • Cables are placed properly and with slack at bending points to avoid stress. • Cables are routed neatly without twists or crossovers in the cabinets.

Cabinet

No.	Check Item	Acceptance Criteria
1	Installation	• The installation meets the design requirements. • The device is level
2	Appearance	• The cabinet surface is free from cracks, dents, and scratches. If the paint flakes off, repair the damaged paint.
3	Cabinet grounding	• Ground the cabinet correctly according to the requirements of the power distribution system.
4	Accessory	• The number and positions of accessories installed meet design requirements.
5	Label	• All labels are correct, clear, and complete

Interior

No.	Check Item	Acceptance Criteria
1	Cable	The bolts for installing the cables are tightened and the cables are not loose.
2	Cable hole sealing	Cable holes are sealed.
3	Components	All components are intact.
4	Foreign object	Foreign objects such as tools and remaining materials are cleared.
5	Meter	The meter is free from cracks, dents, and damage, and its buttons are normal.
6	Cabinet grounding	The ground conductor is securely connected to the ground terminal of the cabinet.

5.1.2 Power-On Operations

Danger!

Wear insulated gloves and use insulated tools to prevent electric shocks or short circuits.

Caution!

- During the power-on procedure, monitor the system for faults. If you detect any faults, power off the device, rectify the faults, and then continue with the procedure.
- If batteries are fully discharged or over-discharged during system installation and commissioning, charge the batteries promptly to prevent damage due to over-discharge.
- If the device has not been used for six months or longer after being installed, it must be checked and tested by processionals before operation.

If a circuit breaker in the device trips, check the corresponding load side.

- Turn on the circuit breaker only after you have confirmed that there is no short circuit or other fault to prevent the fault from spreading and causing safety risks.

Notice!

Before power-on and long-term operation, remove the desiccants from the device and dispose of them according to the applicable local waste disposal act. If the device is powered off immediately after being powered on, keep the desiccants in the device.

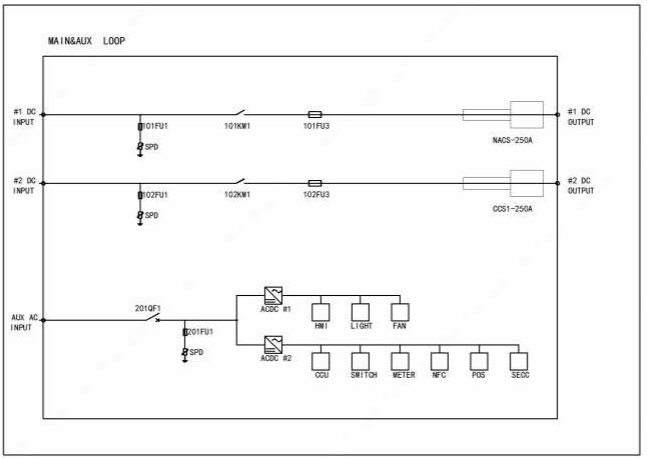

Figure.1

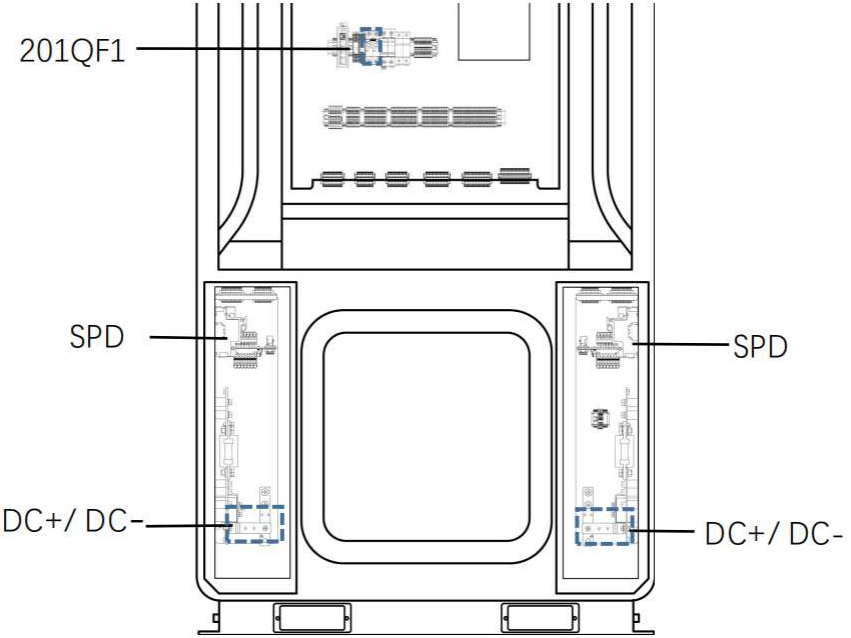

Figure.2

1. Observe whether the screen, meter, and indicators are functioning normally. If the screen displays nothing, the indicators are off, or the meters show no data, remove the upper back panel to check the status of the auxiliary power circuit breaker 201QF1.
2. Connect a computer to the switch of power cabinet via Ethernet cable and then log in to the web platform to check the status of surge protective device (SPD). If the web interface indicates a fault, remove the upper back panel to inspect the SPD.
3. Check the web platform for any other faults. If other faults are present, contact after-sales personnel for handling.
4. Use a multimeter to measure that there is no short circuit between DC+ and DC- port on the input side, and that the impedance between the copper bar and ground is greater than 1MΩ. If a short circuit exists between DC+ and DC- port or the impedance to ground is less than 1MΩ, contact after-sales personnel for handling.

5.2 Powering Off The Equipment

Notice!

Press the emergency stop (EPO) to stop the device only in emergency situations.

1. Disconnect the DC output from the upstream power cabinet, and use a multimeter to confirm that there is no voltage between the DC+ and DC-port.
2. Disconnect the external auxiliary power and observe that the screen displays nothing, the meters show no data, and the indicators are off.

5.3 Charging

1. Unplug & Connect the Charging Gun

Unplug the charging gun, align the plug with the vehicle's charging port, and insert it smoothly and accurately.

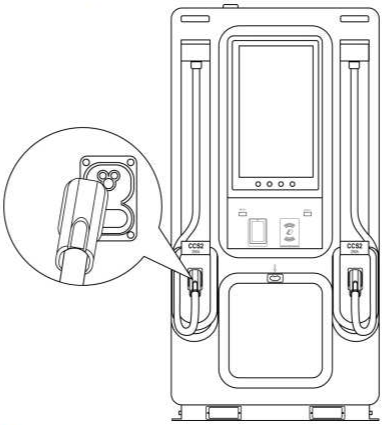

2. Initiate Charging

The charging pile's LCD screen will display "Ready to charge" → "Click to Select Charging Gun" in sequence; after confirming the correct charging gun number, tap the corresponding area on the screen to enter the "Choose Startup Option" interface.

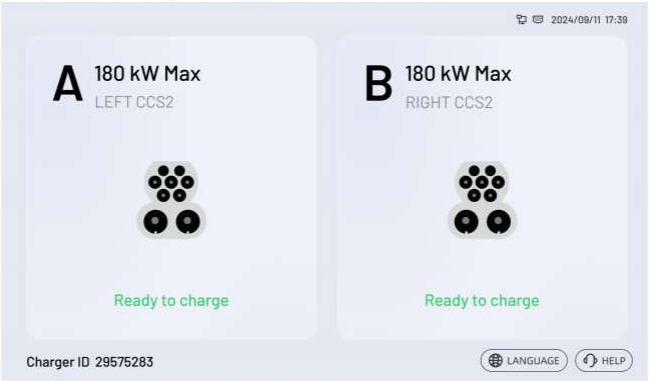

Device Standby

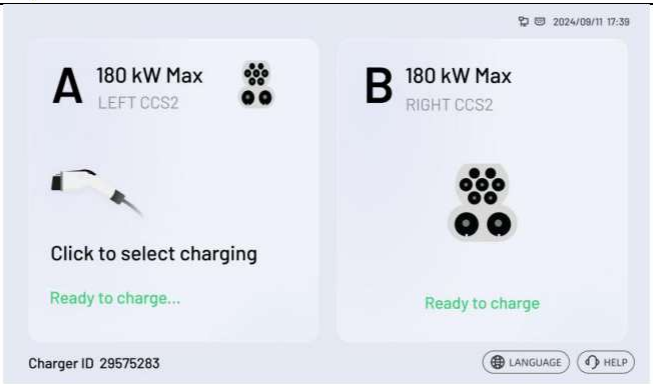

Click to Select Charging Gun

3. Select Authentication Method

In the "Choose Startup Option" interface, three authentication methods are available: RFID card, POS, and charging app/remote start. Click the required method, and then the page will switch to the prompt for the corresponding method, as shown in the figures below. Proceed according to the prompt (this step is for identity authentication only, no payment is made here).

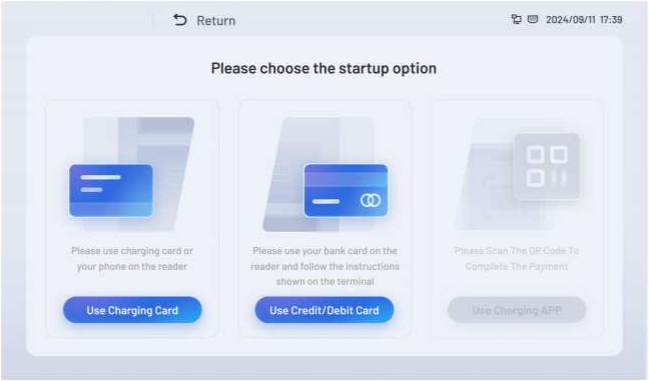

Choose Startup Option

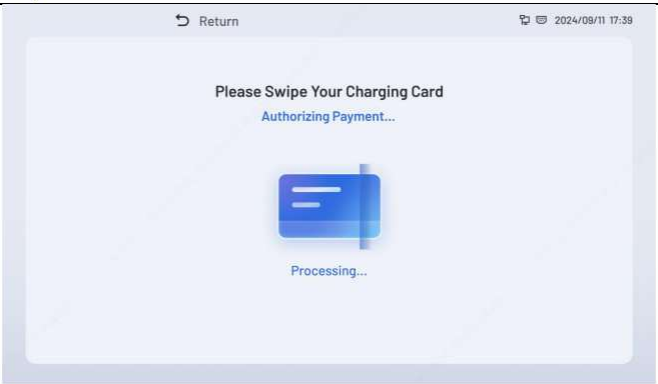

Prompt Page- RFID card

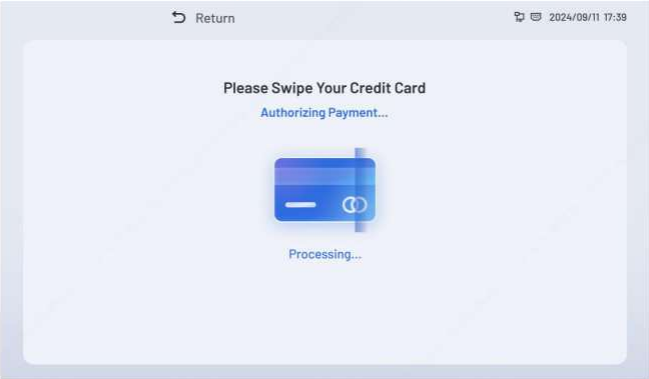

Prompt Page - POS

Prompt Page - charging app/remote start

NOTE: Corresponding prompts will indicate whether authentication succeeds or fails.

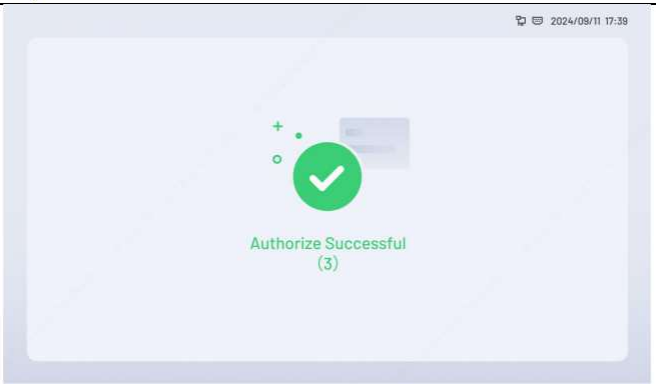

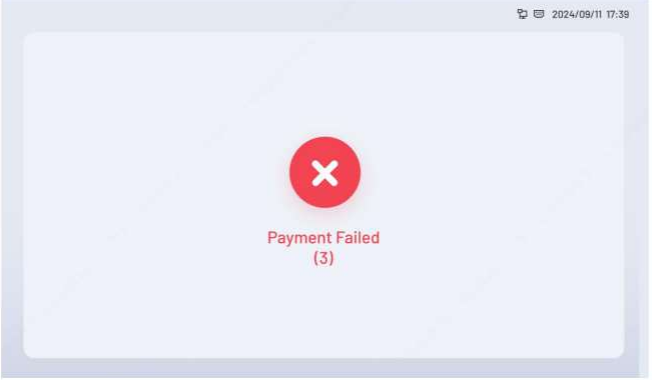

4. Charging Monitoring

After successful authentication, the charging pile's LCD screen will automatically switch to the "Charging" status. Users can click the "Charge info" to check the charge information (Note: Data is for reference only; the final bill shall prevail).

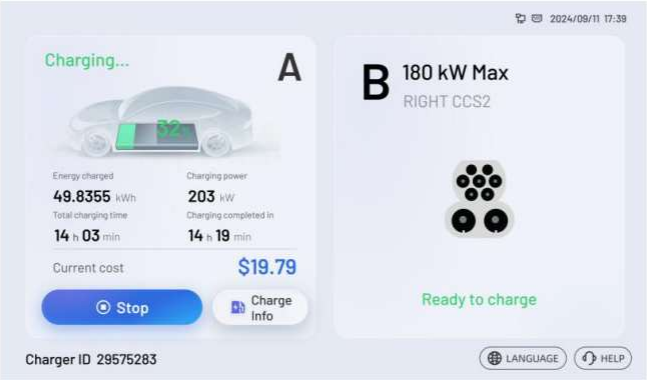

Charging

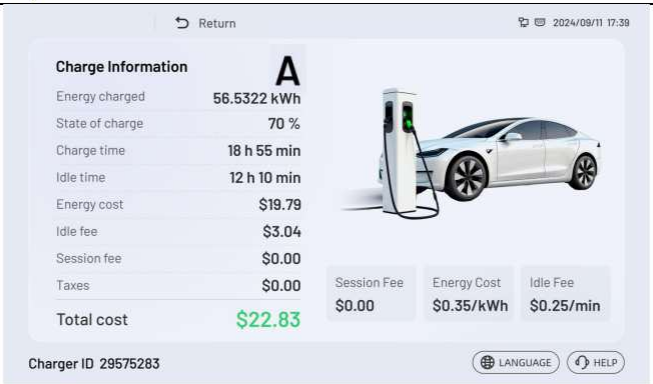

Charge Information

5. End Charging

Charging will stop automatically when completed, or you can tap the corresponding area on the charging pile's LCD screen to stop manually (you can also stop via the vehicle).

After clicking the "Stop" and then the "Sure", the LCD screen will switch to the corresponding payment page. Payment must be processed using the authentication mode selected when initiating charging, with different pages displayed based on the authentication result structure.

NOTE:The authentication mode (RFID/POS/App) selected during the charging initiation phase will serve as the mandatory verification channel for payment credentials.

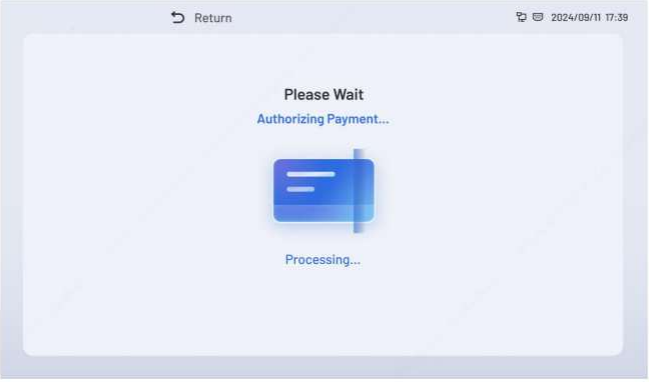

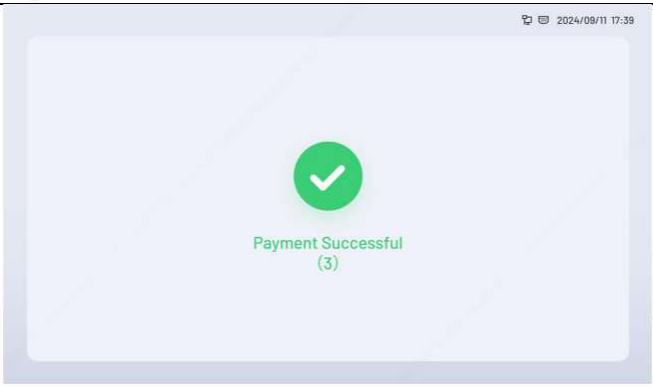

After successful payment, the LCD screen will jump to the bill page, showing the Energy charged, State of charge, cost details etc. And after successful payment, the charging gun will then unlock automatically; please return it to the corresponding slot in the charging pile cabinet.

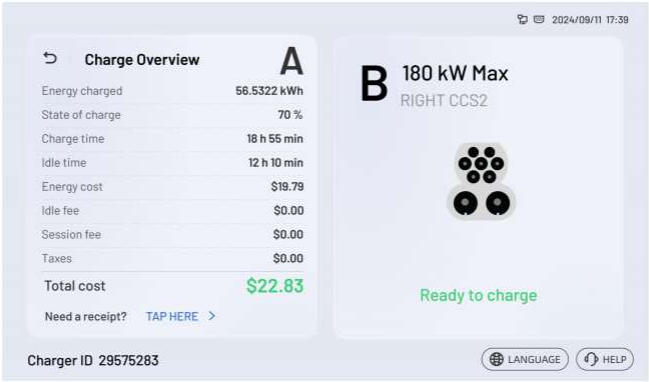

6. Receipt

You may click "TAP HERE" in the lower right corner of the bill to select a billing receipt method. You may choose between two billing receipt methods: email or mobile phone.

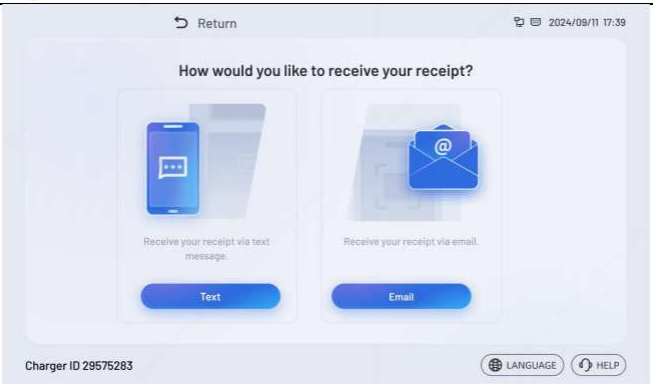

After confirming the receipt method, enter the relevant information.

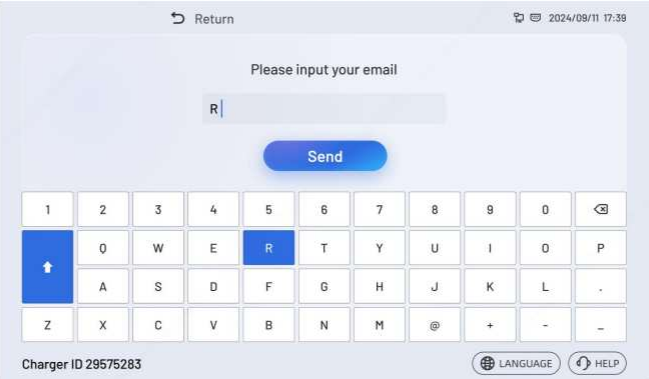

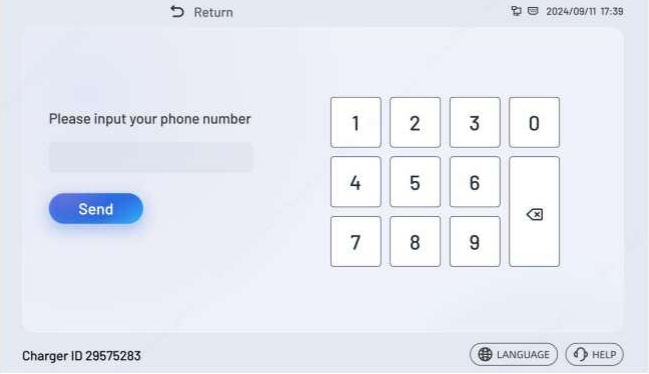

7. Other Conditions

When the charging pile is in any of the following conditions, the charging gun will be locked and unavailable:

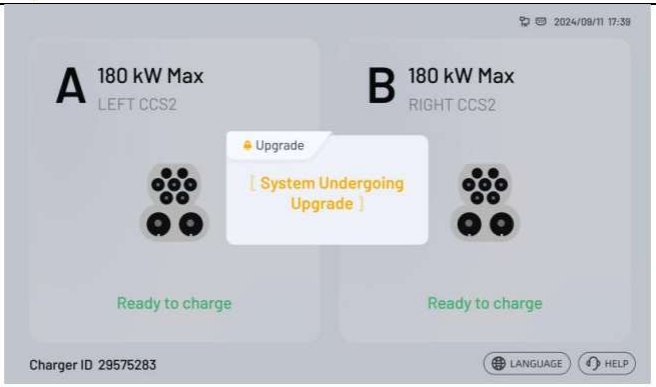

System updating

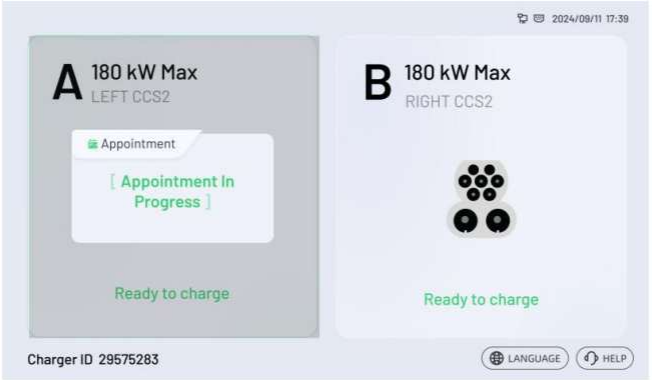

Charging scheduled

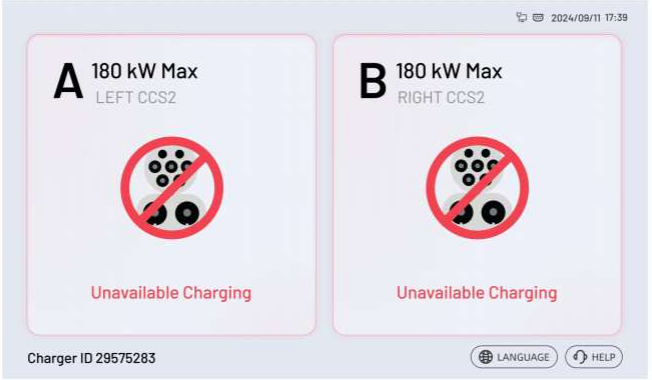

Device malfunction

6 Maintenance

6.1 General Maintenance

Danger!

- Servicing should be performed or supervised by professional personnel.
- Wear personal protective equipment and use dedicated insulated tools to avoid electric shocks or short circuits
- Do not smoke or have an open flame around batteries.
- Do not use wet cloth to clean exposed copper bars or other conductive parts.
- Do not use water or any solvent to clean batteries.
- Charge your equipment in 48 hours after over-discharge.

Warning!

- Do not maintain batteries with power on. Before moving or reconnecting the equipment, disconnect the mains and batteries and wait for five minutes until the equipment powers off. Before maintaining the equipment, check that no hazardous voltages remain in the components to be maintained by using a multi-meters.
- Do not wear jewelry, watches and other metal jewelry when servicing.

Caution!

- Place a warning sign indicting that switch must not be turned on at the position where the switch resides.
- Use a electroscope of a proper voltage level to check whether the equipment is energized and ensure that the equipment is completely powered off.
- Before performing maintenance or repair, securely connect the loop to be repaired to the main ground loop using a ground cable.

- After the maintenance or repair is complete, remove the ground cable between the loop that has been maintained and the main ground loop.
- Stay away from the equipment when preparing cables to prevent cable scraps from entering the equipment. Cable scraps may cause sparks and result in personal injury and equipment damage.
- Cables should be inserted and removed in accordance with regulations. Violent or brute force operations are prohibited.
- After the maintenance is complete, clean the tools and materials in time, and check whether metal objects remain inside or on the top of the product.
- When replacing batteries, replace with the same type of spare parts.
- Do not open or damage batteries. Released electrolyte is harmful to the skin and eyes. It may be toxic.
- If you have any questions about the operation and maintenance of this product, please contact the customer service center. Do not operate without authorization.

6.2 Maintenance Schedule

6.2.1 Routine Maintenance

Maintenance Category	Maintenance Action	Expected Result
System	Log in to the system management platform (WEB/EMS/APP, etc.) to view system alarm information	●NO primary or secondary alarm info.
Indicator	Check that indicators are in normal state.	● See the section "2.6.1 Status indicator"
Outside the cabinet	Check that there are any foreign objects wrapped around the cabinet	●The cabinet is never wrapped around or covered by any foreign objects.

6.2.2 Quarterly Maintenance

Maintenance Category	Maintenance Action	Expected Result
Safety inspection	Check that EPO and switches to shut off the equipment can work normally	● EPO and switches can work normally
Cabinet	Perform the visual inspection: ● Appearance ● Rust condition ● Vent ● Fasteners ● Settings	● There is no obvious paint peeling or rust. ● There is no dust at the vents. ● There are no insects, rodents, snakes or other animals. ● All fasteners are secured firmly. ● All technical settings can support the normal run of the equipment.

6.2.3 Semi-annual Maintenance

Maintenance Category	Maintenance Action	Expected Result
Outside the cabinet	Perform the visual inspection: ● Inflammable materials.	There is no any inflammable objects around the cabinet.
Cabinet	Perform the visual inspection: ● Appearance ● Rust condition ● Vent ● Fasteners ● Settings	● There is no obvious paint peeling or rust. ● There is no dust at the vents. ● There are no insects, rodents, snakes or other animals. ● All fasteners are secured firmly. ● All parameter settings can support the normal run of the equipment.
Cables	● Check whether cables are securely connected. ● Check whether cables are damaged, especially whether the cable sheath that contacts a metal surface is damaged. ● Check whether	●Cables are securely connected. ●No damages are found on the cables. ●No water enters the equipment and contacts with cables. ●There are no insulating tape is peeling off. ●Cable routing is

	water enters into the device ● Check whether any insulating tape on terminals is not detached. ● Check whether all cables are routed correctly.	performed correctly and reasonably
Protective components	Perform an inspection: ●SPD	●Validate the integrity and functionality of surge protection devices and fuses

6.2.4 Annual Maintenance

Maintenance Category	Maintenance Action	Expected Result
Outside the cabinet	Perform the visual inspection: ● Inflammable materials.	There is no any inflammable objects around the cabinet.
Cabinet	Perform the visual inspection: ● Appearance ● Rust condition ● Vent ● Fasteners ● Settings	● There is no obvious paint peeling or rust. ● There is no dust at the vents. ● There are no insects, rodents, snakes or other animals. ● All fasteners are secured firmly. ● All technical settings can support the normal run of the equipment.
Cables	● Check whether cables are securely connected. ● Check whether cables are damaged, especially whether the cable sheath that contacts a metal surface is damaged. ● Check whether water enters into the	●Cables are securely connected. ●No damages are found on the cables. ●No water enters the equipment and contacts with cables. ●There are no insulating tape is peeling off. ●Cable routing is

	device ● Check whether any insulating tape on terminals is not detached. ● Check whether all cables are routed correctly.	performed correctly and reasonably
Protective components	Perform an inspection: ●SPD	●Validate the integrity and functionality of surge protection devices and fuses
Alert labels	●Check the warning labels.	●All warning labels are visible, and no damages or stains on them.
Fire-resistant mud/Foundation	Perform an inspection: ●Fire-resistant mud ●Foundation	● The fire-resistant mud exhibits excellent adhesion. ● The foundation is intact with a smooth surface

7 Troubleshooting

When any error exists in your equipment, please contact the service center or service engineers for help.

8 Repair Paint Damage

8.1 Prerequisites

• Do not apply paint in bad weather, such as rain, snow, strong wind, and sandstorm, when there is no shelter outdoors.
• You have prepared the required paint that matches the color palette delivered with equipment.

8.2 Paint Repair Description

The equipment appearance should be intact. If paint has flaked off, repair paint damage immediately.

Note!

Check the paint damage on the equipment and prepare appropriate tools and materials. The number of materials depends on site requirements.

8.2.1 Paint repair description

<table>
<tr><th>Paint Damage</th><th>Tool and Material</th><th>Procedure</th><th>Description</th></tr>
<tr><td>Slight scratch (steel base material not exposed)</td><td rowspan="2">Spray paint or paint, brush (required for repainting a small area), fine sandpaper, anhydrous alcohol, cotton cloth, and paint spray gun (required for repainting a large area)</td><td rowspan="2">Steps 1, 2, 4, and 5</td><td rowspan="5">1. For a few scratches, smudges, or rust, manual paint spraying or brushing is recommended.
2. For many scratches or large-area smudges and rusts, use a paint spray gun.
3. The paint coating should be thin and even. Paint drops are prohibited on the coating. The surface should be smooth.
4. Leave the repainted area for approximately 30 minutes before performing any further operation.</td></tr>
<tr><td>Smudges and rust that cannot be removed</td></tr>
<tr><td>Deep scratch (primer damaged, steel base material exposed)</td><td>Spray paint or paint, zinc-rich primer, brush (required for repainting a small area), fine sandpaper, anhydrous alcohol, cotton cloth, paint spray gun (required for repainting a large area)</td><td>Steps 1, 2, 3, 4, and 5</td></tr>
<tr><td>Logo and pattern damage</td><td colspan="2">If a logo or pattern is damaged, provide the logo size and color number. Seek help from a local supplier of advertisement coatings to formulate a repair</td></tr>
</table>

	solution based on the logo size, color, and damage.	
Dent	If a dent is less than or equal to 100 mm^2 in area and less than 3 mm in depth, fill the dent with Poly-Putty base and then perform the same operations as those for processing deep scratches. If a dent is greater than 100 mm2 in area or greater than 3 mm in depth, ask the local supplier for an appropriate repainting solution.	

8.2.2 Procedure

1. Gently polish damaged areas using fine sandpaper to remove smudges or rust.

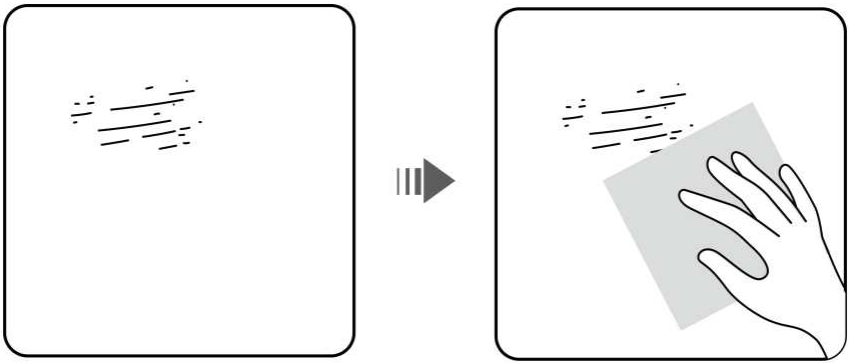

2. Dip a piece of cotton cloth into anhydrous alcohol and wipe the polished or damaged area to remove the dirt and dust. Then wipe off the anhydrous alcohol with a clean and dry cotton cloth.

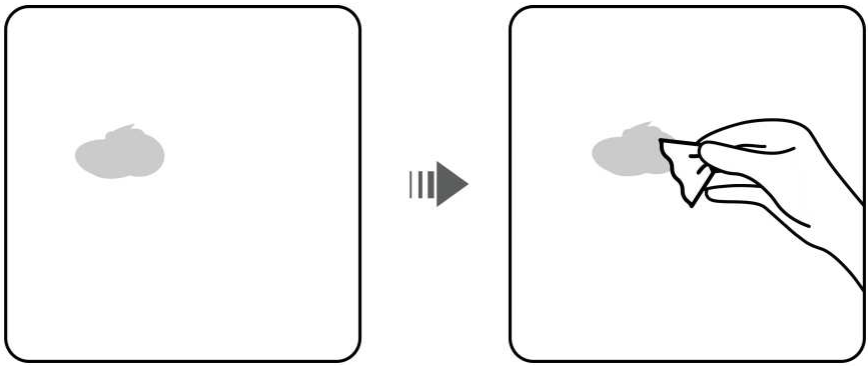

3. Paint zinc-rich primer on the damaged coat using a brush or paint spray gun.

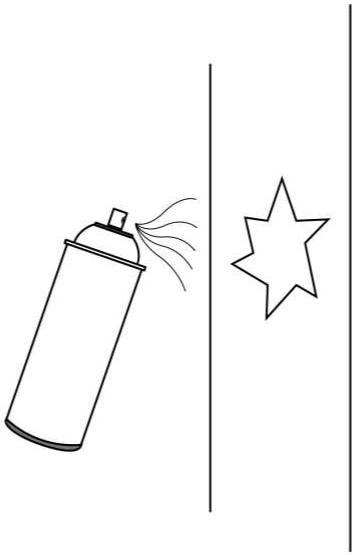

Notice!

• If the base material is exposed in the area to be repaired, apply epoxy zinc-rich primer, wait until the paint has dried, and then apply acrylic acid top coat.

• Select epoxy zinc-rich primer or acrylic acid top coat with a color the same as the surface coating color of the equipment.

4. Apply paint evenly to the damaged area based on the damage degree of the paint using an aerosol spray, brush, or paint spray gun until all damage traces are invisible.

Notice!

• Ensure that the painting is thin, even, and smooth.

• In the case that an equipment pattern has different colors, to prevent undamaged areas and those with different colors as the damaged area from being contaminated during repainting, cover such areas using white paper and adhesive tape before repairing paint.

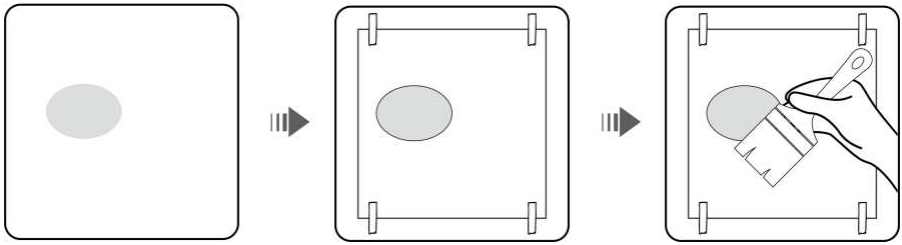

5. Wait for 30 minutes and check whether the painting meets the requirements.

Note!

• The color of the repainted area must be consistent with that of the surrounding area. Make sure that there is no visible edge between the repainted area and the surrounding area. The paint should be free of bulges, scratches, flaking, or cracks.

• If you choose to spray paint, it is recommended that you spray paint three times before checking the result. If the color does not meet the requirements, paint more times until the painting meets the requirements.

9 Emergency Handling

If an accident (including but not limited to the following) occurs on the site, ensure the safety of onsite personnel first and contact the service engineers.

9.1 Flood

• Power off the system if it is safe to do so.

• If any part of the device is submerged in water, do not touch the batteries to avoid electric shock.

• Do not use the device that have been soaked in water. Contact a recycling company for disposal.

9.2 Fire

Danger!

• If a fire occurs, power off the system if it is safe to do so.

• Extinguish the fire with carbon dioxide, FM-200 or ABC dry powder fire extinguishers.

• Ask firefighters to avoid contact with high-voltage components during fire fighting to prevent the risk of electric shock.

9.3 Fire Alarm

When the alarm indicator on the equipment blinks or buzzes:

• Do not approach.

• Stay away immediately.

• Cut off the power supply remotely only when your safety is guaranteed.

9.4 Gas Exhaust

• Onsite personal protection: Do not directly face the exhaust vents.

• Post-disaster product maintenance: Contact the service engineers for evaluation.

9.5 Extinguishant Release or Fire

Suggestions for onsite O&M personnel:

• When a fire occurs, evacuate from the building or equipment area, press the fire alarm bell, and immediately call the fire emergency service. Notify the professional firefighters and provide them with relevant product information.

• Do not enter the affected building or equipment area under any circumstances. Isolate and monitor the site. Keep irrelevant personnel away from the site.

• After calling the fire emergency service, remotely power off the system while ensuring your own safety.

• After the fire is extinguished, the site must be handled by professionals in accordance with local laws and regulations.

• Post-disaster product maintenance: Contact the service engineers for evaluation.

Suggestions for professional firefighters:

• For product information, see the information provided by O&M personnel.

• Do not open the device before it is deemed safe by professionals.

• Follow local fire fighting regulations.

• When a fire occurs, prevent the fire from spreading to nearby surrounding.

10 Storage

Note!

- Only trained and qualified personnel are allowed to operate the device. Wear insulated gloves and use dedicated insulated tools during the operation.
- The storage environment must comply with local regulations and standards.
- You are advised to store the device in a dry, clean, and ventilated indoor environment that is free from sources of strong infrared or other radiations, organic solvents, corrosive gases, and conductive metal dust. Do not expose the device to direct sunlight or rain. Keep the device far away from sources of heat and fire.
- The site where the device is stored shall be equipped with approved fire-fighting facilities, such as fire sand and fire extinguishers
- The device must be disconnected from external equipment during storage, and the device indicators must be off.
- Place the device correctly according to the signs on the packing case during storage. Do not place the device upside down, lay it on one side, or tilt it.

The device packaging signs are described as follows.

Name	Symbol	Description
Up	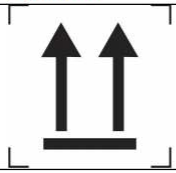	The package shall be kept upright during transportation and storage.

Fragile		The package contains fragile objects and shall be handled with care.
Keep dry		The package shall be protected against rain, and rainproof measures shall be taken during transportation and storage.
Do not roll	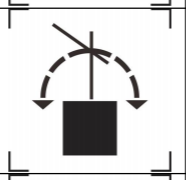	The package shall not be rolled during transportation.
Do not stack	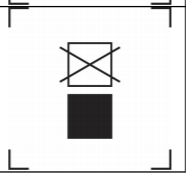	The package shall not be stacked.

- Do not unpack an device if it will be stored for a long time.
- Do not stack the device.
- Ensure that the ground surface is flat (for long-term or temporary storage).
- Refer to the section “Technical Specification” for storage temperature and humidity.
- For long-term storage (more than six months after delivery), replace the desiccants with those of the same specifications and amount.

- If the device has been stored for longer than allowed, promptly report the condition to the person in charge.
- Handle the device with care to prevent damage.

11 Transport

1. The product should be transported after packaging and during the transportation process. Severe vibration, impact, or extrusion should be prevented to prevent sun and rain. It can be transported using vehicles such as cars, trains, and ships.
2. Always check all applicable local, national, and international regulations before transport.
3. Transportation and storage service providers must have the certification for dangerous goods operations required by local laws, regulations, and standards.
4. Before transportation, make a compliant and accurate declaration. Ensure that the packaging, labels, and markings are intact and there is no abnormal smell, leakage, smoke, or fire. Otherwise, the device cannot be transported.
5. Exercise caution when moving the device to prevent bumping and ensure personal safety.
6. Unless otherwise specified, dangerous goods must not be mixed with goods containing food, medicine, animal feed, or their additives in the same vehicle or container, and sharp objects are not allowed in the same vehicle or container.
7. When transporting the device, avoid approaching flammable material storage areas, residential areas, or other densely populated places, such as mass transit facilities or elevators.

12 Technical Specifications

Model	MS-DCC180-2
DC Input Data	
DC Input Voltage Range	150~1000Vd.c. 500A max
Input number	2 DC inputs
DC Output Data	
Output interface	1 pile 2 guns, each gun 180kW charging power, support the CCS2 charging standard interface
DC Output range	150~1000Vd.c. 500A max
Max. Output Power	360kW(2*180kW)
Max. Output Current	Single gun Max. 250A
Environmental Conditions	
Operating Temperature Range	-30℃ to +55℃（derating above 50℃）
Storage Temperature	-40℃ to +60℃
Humidity	≤ 95%RH, no condensation
Cooling	Natural cooling
Altitude	≤2000m
IP Rating of Enclosure	IP54
Other Parameter	
Dimension (W × H × D)	1100 mm × 2200 mm (without GPS&4G antenna) × 400mm
Approximate Weight	280kg

Service Hotline: +86-0574-86320560

Email: service-device@deye.com.cn

Website: http://deyedevice.com