# ESS Solution

## SE-F5 & SE-F5 Plus & SE-F12 & SE-F16 &SUN-3/3.6/5/6K-OG01LP1-EU-AM2

### SE-F5 & SE-F5 Plus & SE-F12 & SE-F16

**Comprehensive Protection**
Advanced BMS with active fuse

**Superior Performance**
Support Max. 1C charge & 1.2C discharge (SE-F5 & F5 Plus), GaN MOSFETs: 50% loss reduction, high-temp resistance

**Optimized Energy Density**
Integrated PACK: reduced line loss, enhanced energy density

**Flexible Expansion**
Max. 32 units in parallel

**Easy Maintenance**
Auto-networking, Local monitoring mode for battery, remote monitoring mode for ESS

**Reliable Durability**
Operates reliably in -20℃ to 55℃, natural cooling

### SUN-3/3.6/5/6K-OG01LP1-EU-AM2

**High Performance**
Support a peak output of 2 times the rated power for up to 10 seconds

**High Efficiency**
4ms UPS-level switching time
Max. efficiency of 97.6% for optimal performance

**Parallel Scalability**
Supports 16 pcs parallel (off-grid)

**Outdoor-Ready**
IP65-rated, built to withstand tough environments

**Smart MPPT Technology**
2 MPPTs, supports 1.6x PV oversizing (18A+18A), optimizing energy from panels at various angles

**Generator Integration**
Support storing energy from diesel generator

**Durable & Reliable**
Independent cooling design reduces dust accumulation and extends lifespan

**Long-Term Assurance**
5-year warranty, extendable to 10 years for peace of mind

| Model | SUN-3K-OG01LP1 -24-EU-AM2 | SUN-3.6K-OG01LP1 -EU-AM2 | SUN-5K-OG01LP1 -EU-AM2 | SUN-6K-OG01LP1 -EU-AM2 |
|---|---|---|---|---|
| **Battery Input Data** | | | | |
| Battery Type | Lead-acid or Lithium-ion | | | |
| Battery Voltage Range (V) | 20-30 | 40-60 | | |
| Max. Charging Current (A) | 130 | 90 | 120 | 135 |
| Max. Discharging Current (A) | 130 | 90 | 120 | 135 |
| Charging Strategy for Li-ion Battery | Self-adaption to BMS | | | |
| Number of Battery Input | 1 | | | |
| **PV String Input Data** | | | | |
| Max. PV Access Power (W) | 6000 | 7200 | 10000 | 12000 |
| Max. PV Input Power (W) | 4800 | 5760 | 8000 | 9600 |
| Max. PV Input Voltage (V) | 500 | | | |
| Start-up Voltage (V) | 125 | | | |
| PV Input Voltage(V) | 125-500 | | | |
| MPPT Voltage Range(V) | 150-425 | | | |
| Full Load MPPT Voltage Range(V) | 300-425 | | | |
| Rated PV Input Voltage (V) | 370 | | | |
| Max. Operating PV Input Current (A) | 18 | 18+18 | | |
| Max. Input Short-Circuit Current (A) | 27 | 27+27 | | |
| No. of MPP Trackers/No. of Strings MPP Tracker | 1/1 | 2/1+1 | | |
| Max. Inverter Backfeed Current to The Array(A) | 0 | | | |
| **AC Output Data** | | | | |
| Rated AC Output Power (VA/W) | 3000 | 3600 | 5000 | 6000 |
| Max. AC Output Power (VA/W) | 3000 | 3600 | 5000 | 6000 |
| Max. AC Output Current (A) | 13.1 | 15.7 | 21.8 | 26.1 |
| Peak Power (W) | 2 times of rated power, 10s | | | |
| Rated Output Voltage (V) | 230 | | | |
| Output Type | L+N+PE | | | |
| Rated Output Frequency | 50Hz / 60Hz | | | |
| Output Voltage Waveform | Pure Sine Wave | | | |
| Total Current Harmonic Distortion THDi | ＜3% | | | |
| **AC Input Date(Grid and Generator)** | | | | |
| Max. Input Power to Battery (W) | 3000 | 3600 | 5000 | 6000 |
| Rated Input Voltage (V) | 230 | | | |
| Rated Input Frequency | 50Hz / 60Hz | | | |
| Gird Input Current (A) | 35 | | | |
| Generator Input Current (A) | 35 | | | |
| **Efficiency** | | | | |
| Max. Efficiency | 97.60% | | | |
| Euro Efficiency | 96.50% | | | |
| MPPT Efficiency | >99% | | | |
| **Equipment Protection** | | | | |
| Integrated | DC Reverse Polarity Protection, AC Output Overcurrent Protection, Thermal Protection, AC Output Overvoltage Protection, AC Output Short Circuit Protection, DC Component Monitoring, Arc Fault Circuit Interrupter (optional), Insulation Impedance Detection, DC Switch | | | |
| Surge Protection Level | TYPE II(DC), TYPE II(AC) | | | |
| **Interface** | | | | |
| LCD/LED Display | LCD | | | |
| Communication Interface | WIFI/RS485/CAN/Bluetooth | | | |
| **General Data** | | | | |
| Max. Operating Frequency(Hz) | 200M | | | |
| Operating Temperature Range (°C) | -40 to +60°C, >45°C Derating | | | |
| Permissible Ambient Humidity | 0-100% | | | |
| Permissible Altitude | 3000m | | | |
| Noise (dB) | <55 | | | |
| Ingress Protection(IP) Rating | IP 65 | | | |
| Inverter Topology | Non-Isolated | | | |
| Over Voltage Category | OVC II(DC), OVC III(AC) | | | |
| Cabinet Size (WxHxD mm) | 306×427.5×175.77 (Excluding Connectors and Brackets) | | | |
| Weight (kg) | 12.65 | | | |
| Type of Cooling | Intelligent Air Cooling | | | |
| Warranty | Standard 5 years, extended warranty | | | |
| Safety / EMC Standard | IEC62109-1/-2, EN61000-6-1,EN61000-6-2,EN61000-6-3,EN61000-6-4 | | | |

# ESS Solution

| Model | | SE-F5 | SE-F5 Plus | SE-F12 | SE-F16 |
|---|---|---|---|---|---|
| **Main Parameters** | | | | | |
| Battery Chemistry | | $LiFePO_4$ | | | |
| Capacity | | 100 Ah | | 235 Ah | 314 Ah |
| Scalability [1] | | Max. 32 pcs in parallel | | | |
| Nominal Voltage | | 51.2 V | | | |
| Operating Voltage | | 44.8 V ~ 57.6 V | | | |
| Nominal Energy | | 5.12 kWh | | 12.03 kWh | 16 kWh |
| Rated Power[2] | | 1.5 kW | | 3.5 kW | 4.8 kW |
| Charge Current [3] | Recommend | 30 A | | 115 A | 157 A |
| | Max. Continuous | 100 A | | 230 A | 160 A |
| | Peak | 120 A ( 10 sec ) | | 280 A ( 10 sec ) | |
| Discharge Current [3] | Recommend | 30 A | | 115 A | 157 A |
| | Max. Continuous | 120 A | | 230 A | |
| | Peak | 150 A ( 10 sec ) | | 280 A ( 10 sec ) | |
| **Other Parameter** | | | | | |
| Recommend Depth of Discharge | | 80% DoD | 90% DoD | | |
| Dimension ( W × H × D ) (Without hanging board) | | 370 × 548 × 140 mm | | 400 × 599 × 233 mm | 400 × 708 × 233 mm |
| Weight Approximate | | 41 kg | | 84 kg | 109 kg |
| LED Indicator | | LED ( SOC, working, protecting ) & Buzzer | | | |
| IP Rating of Enclosure | | IP21 | | | |
| Operating Temperature | | Charge: 0～55°C<br>Discharge: -20°C～55°C | Charge: -10～55°C<br>Discharge: -20°C～55°C | Charge: 0～55°C / Discharge: -20°C～55°C | |
| Storage Temperature | | 0～35°C | | | |
| Relative Humidity | | 95% (non-condensing) | | | |
| Altitude | | ≤3000m | | | |
| Cycle Life | | ≥6000(25°C±2°C,70%EOL) | | | |
| Installation | | Wall-Mounted, Floor-Mounted, Stack-Mounted | | | |
| Communication | | CAN2.0, RS485, Bluetooth+APP | | | |
| Warranty Period [4] | | 5 years | 5 Years / 10 Years<br>The warranty period depends on the final installation site of the battery system.<br>For more information, please refer to the warranty policy. | | |
| Energy Throughput [4] | | 8 MWh | 16 MWh | 37 MWh | 50 MWh |
| Certification | | UN38.3, CE, CB | | | |

[1] Max. 64 pcs can parallel with CAN-Bridge.
[2]0.3C charge & discharge at 25°C
[3]The current is affected by temperature and SOC.
[4] Conditions apply, refer to Deye Warranty Letter.

| Model | SUN-3K-OG01LP1-24-EU-AM2 | SUN-3.6K-OG01LP1-EU-AM2 | SUN-5K-OG01LP1-EU-AM2 | SUN-6K-OG01LP1-EU-AM2 |
|---|---|---|---|---|

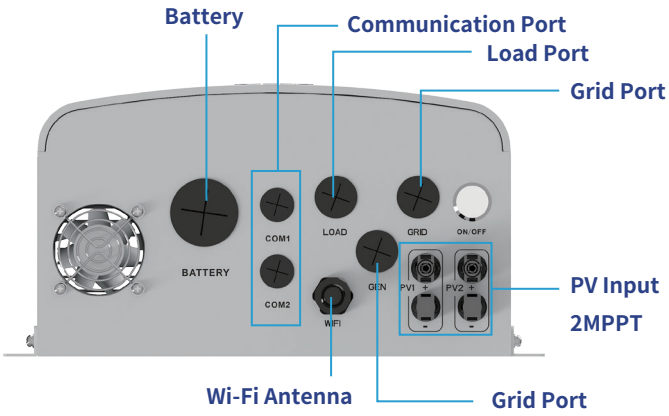


◎ Battery Port: Connects to the battery for energy storage, supporting 40-60V DC with a max charge/discharge current of 135A.
◎ Communication Port: Enables data exchange and system monitoring for seamless operation.
◎ Load Port: Delivers stable AC power to connected household loads.
◎ Grid Port: Links to the utility grid for energy exchange and system stability.
◎ Generator Port: Connects to a backup generator for additional power supply during outages.
◎ PV Input: Supports solar panel connection with 2 MPPTs, handling up to 9600W input power.
◎ Wi-Fi Antenna: Allows wireless connectivity for remote monitoring and system management.

| Model | SE-F5 & SE-F5 Plus & SE-F12 & SE-F16 |
|---|---|

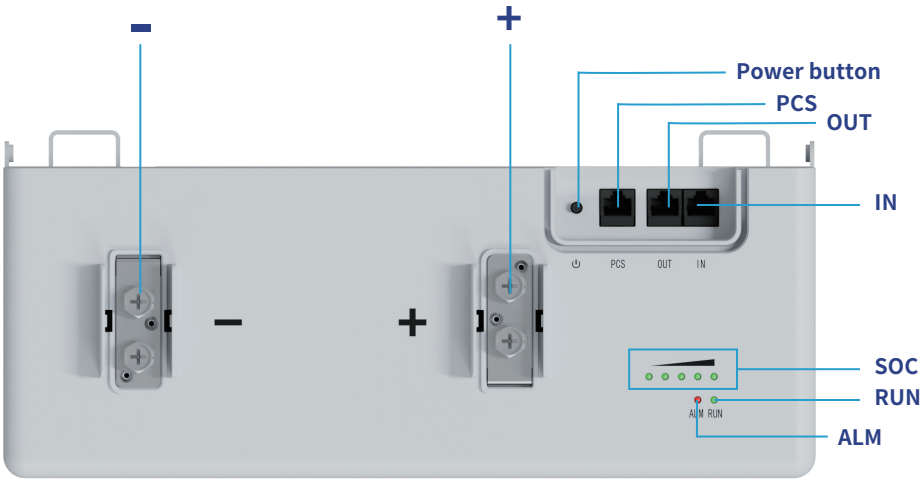


◎ -: Battery negative terminal connection position.
◎ +: Battery positive terminal connection position.
◎ SOC: These 5 LEDs are used to display the pack SOC and charge or discharge state.
◎ RUN light: green LED lighting to show the battery running status.
◎ ALM light: red LED lighting to show the battery has been alarmed .
◎ Power button: Power on or off the control battery.
◎ PCS: Inverter communication terminal:(RJ45port) follow the CAN protocol (baud rate:500kbps),and RS485(baud rate:9600bps),used to output battery information to the inverter.
◎ OUT: parallel Communication Terminal:(RJ45port) Connect "IN"Terminal of Next battery,for Communication between multiple parallel batteries.
◎ IN: parallel Communication Terminal: (RJ45 port) Connect "OUT" Terminal of Previous battery,for Communication between multiple parallel batteries.

# Deye Smart Energy Management System(Optional)

The Deye Smart Energy Management System enables seamless control with smart CT, smart plug, smart switch and solar EV charging, ensuring efficiency and full compatibility with Deye inverters.

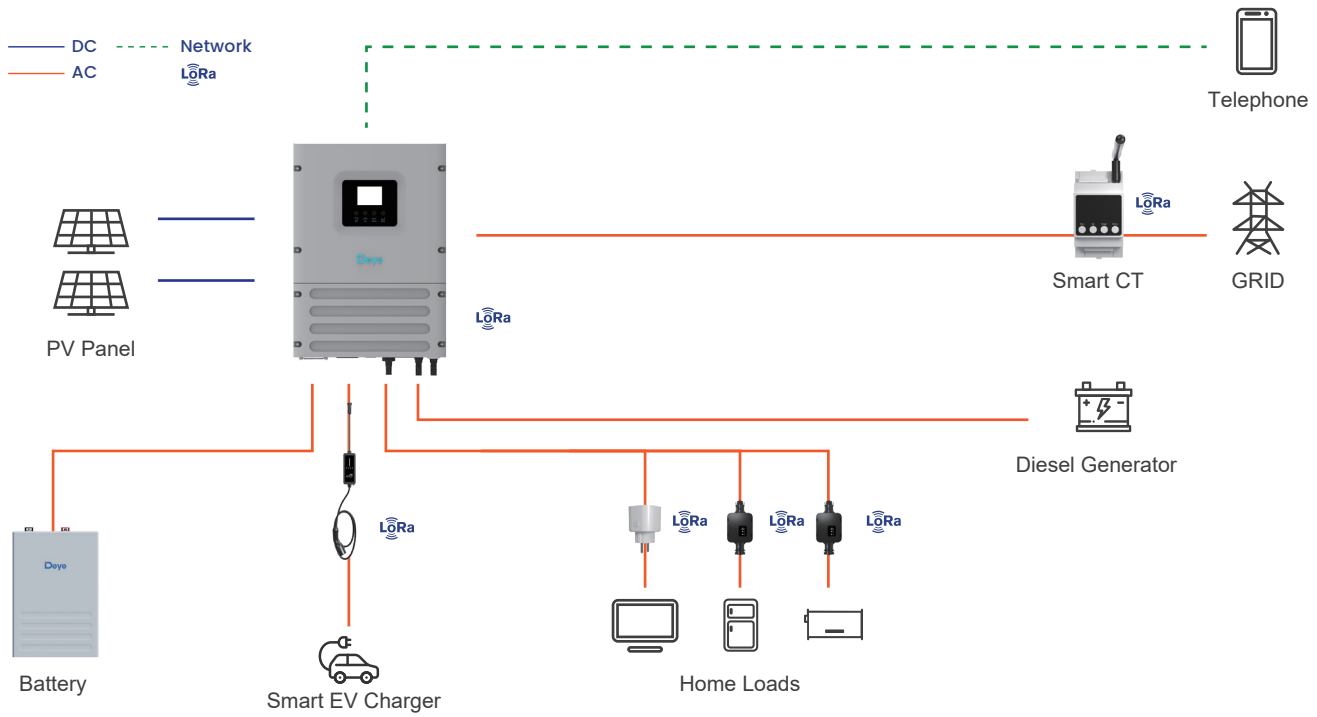


## Key Features

- **Wireless Zero Export Control**
  Enables seamless zero export without the need for complex wiring, simplifying installation.
- **Intelligent Load Control**
  Automatically manages loads based on time schedules and battery SOC, optimizing energy distribution.
- **Solar-Powered EV Charging**
  Supports 100% solar charging with dynamic power adjustment for enhanced efficiency and sustainability.
- **Full Compatibility**
  All Deye hybrid inverters can be upgraded to support this system, ensuring seamless integration with existing setups.
- **Precise Off-Grid Load Management**
  Ensures that only non-essential loads are disconnected during off-grid operation, maintaining power supply for critical applications.

# Deye APP

## Local monitoring mode for battery

- Bluetooth APP Monitoring
- Low Power (Bluetooth LE)
- Automated upgrade

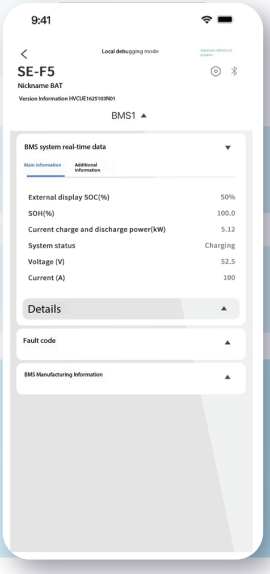


- Quick Pairing
- No Internet Needed
- Portable Control

## Remote monitoring mode for ESS(Inverter&Battery)

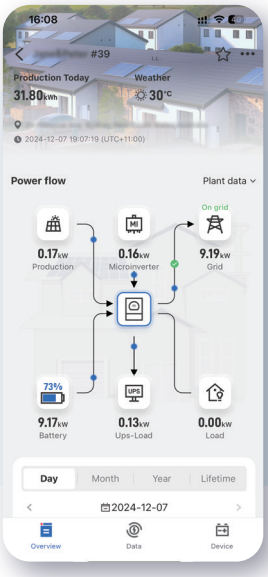


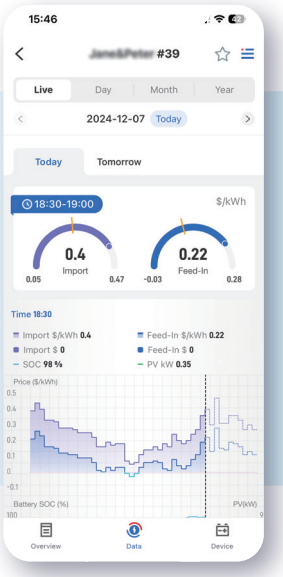


- Real-time Equipment Monitoring
- Intelligent Charging/Discharging Strategies
- AI Data Analytics
- Customized Maintenance

## Smarten Up Your Home Energy

→

Download Deye APP to join us!

Embrace a seamless, effortless energy experience that's both ecofriendly and budget-friendly with our intelligent assistant